DEPARTMENT OF ENVIRONMENTAL QUALITY

WASTE AND HAZARDOUS MATERIALS DIVISION

STORAGE AND HANDLING OF GASEOUS AND LIQUEFIED HYDROGEN SYSTEMS

(By authority conferred on the department of environmental quality by section 3c of 1941 PA 207, MCL 29.3c, and Executive Reorganization Order No. 1998-2, MCL 29.461)

PART 1. GENERAL PROVISIONS

R 29.7001 Applicability.

Rule 1. These rules apply to the operation of all gaseous and Liquefied hydrogen systems. A person shall comply with these rules, other applicable state and federal statutes, and rules and regulations promulgated under the statutes.

History: 2008 AACS.

R 29.7002 Storage and handling of gaseous and Liquefied hydrogen; adoption of standard by reference.

Rule 2. The national fire protection association's (NFPA) Pamphlet 50A, "Standard for Gaseous Hydrogen Systems at Consumer Sites," 1999 edition and NFPA Pamphlet 50B, "Standard for Liquefied Hydrogen Systems at Consumer Sites," 1999 edition, referred to in these rules as the "code," pertaining to the storage and handling, but not transportation, of gaseous and Liquefied hydrogen, are adopted by reference as part of these rules. Copies of the adopted code are available for inspection at the office of the Department of Environmental Quality, Waste and Hazardous Materials Division, Storage Tank Unit, P.O. Box 30241, Lansing, Michigan 48909-7741, or for purchase from the National Fire Protection Association, Batterymarch Park, Quincy, Massachusetts 02269, telephone number 800-344-3555. The cost of the code, at the time of the adoption, is $28.00 each, plus a $7.95 handling charge, per copy; or at the office of the Department of Environmental Quality, Waste and Hazardous Materials Division, Storage Tank Unit, P.O. Box 30241, Lansing, Michigan 48909-7741, for a cost, at the time of the adoption of these rules, of $35.95, per copy, plus $20.00 handling, plus shipping.

History: 2008 AACS.

PART 2. STORAGE AND HANDLING OF GASEOUS HYDROGEN NFPA 50A

Chapter 1 General Information

R 29.7010 Chapter 1 General information.

Rule 10. Sections 1-1 to 1-1.2 of the storage and handling of gaseous and Liquefied hydrogen code are added as follows:

1-1 Scope. This standard covers the requirements for the design, siting, construction, installation, operation, maintenance, and dispensing from a gaseous hydrogen system.

1-1.1 Nothing in this hydrogen code shall be intended to prevent the use of systems, methods, or devices of equivalent or superior quality, strength, fire resistance, effectiveness, durability, environmental protection capability, or safety over those prescribed by this hydrogen code, if technical documentation is submitted to the department to demonstrate equivalency and the system, method, or device is approved for the intended purpose.

1-1.2 This code shall apply to the design and installation of compressed H_2 dispensing systems.

Exception: Dispensing to rail and aircraft.

History: 2008 AACS.

R 29.7011 Classification.

Rule 11. Section 1-2 is reproduced from NFPA 50A as follows:

1-2 Classification. Systems are classified according to the total volume of hydrogen, including unconnected reserves, as follows:

(a) Less than 3500 scf (99 m3), except as covered in 1-3.1

(b) From 3500 (99 m3) to 15,000 scf (425 m3)

(c) In excess of 15,000 scf (425 m3)

History: 2008 AACS.

R 29.7012 Application.

Rule 12. Section 1-3.2 is reproduced from NFPA 50A, and sections 1-3,

1-3.1, 1-3.3, 1-3.4, and 1-3.5 of the storage and handling of gaseous and Liquefied H_2 code are added as follows:

1-3 Application.

1-3.1 The application of this standard at places of public assembly shall meet the requirements of section 3-2.2(a) and the approval of the department.

1-3.2 This standard shall not apply to single systems using containers having a total H_2 content of less than 400 scf (11 m3). Where individual systems, each having a total H_2 content of less than 400 scf (11 m3), are located less than 5 ft (1.5 m) from each other, this standard shall apply.

1-3.3 This standard does not apply to flow-through process containers.

1-3.4 When required by the department, H_2 introduced into any system covered by this code shall have a leak detection system acceptable to the department and based on the best interest of public health, safety, and welfare and the environment.

1-3.5 Gaseous H_2 in fuel tanks on vehicles and mobile equipment shall not be included in determining the maximum allowable quantities.

History: 2008 AACS.

R 29.7013 Retroactivity.

Rule 13. Sections 1-4 and 1-4.1 of the storage and handling of gaseous and Liquefied H_2 code are added as follows:

1-4 Retroactivity.

1-4.1 The provisions of this H_2 code are necessary to provide a reasonable level of protection from loss of life and property from fire and explosion. The provisions shall reflect situations and the state of the art prevalent when the H_2 code was issued. Unless otherwise noted, it is not intended that the provisions of this H_2 code be applied to facilities, equipment, structures, or installations that were existing or approved for construction or installation before the effective date of this H_2 code, except in those cases where it is determined by the department that the existing situation involves a distinct hazard to public health, safety, adjacent property, or the environment.

History: 2008 AACS.

R 29.7014 Definitions.

Rule 14. Section 1-5 of the storage and handling of gaseous and Liquefied H_2 code is added, and Section 1-5.1 is reproduced from NFPA 50A as follows:

1-5 Definitions.

(a) "ANSI" means the american national standards institute.

(b) "Approved" means acceptable to the department.

(c) "ASME" means the american society of mechanical engineers.

(d) "Authority having jurisdiction" means the department.

(e) "Automatic emergency shutoff valve" means a designated fail-safe automatic closing valve designed to shutoff the flow of gases or liquids that is initiated by a control system where the control system is activated by either manual or automatic means.

(f) "Bulk storage" means a single container or containers, where all containers draw down at the same time.

(g) "Cargo transport container" means a mobile unit designed to transport gaseous or liquefied H_2.

(h) "Cascade storage system" means storage in containers or cylinders arranged in banks where each bank acts as 1 large container. The banks are separated by switching valves to provide sequential drawdown of the banks.

The bank may consist of 1 or more containers or cylinders.

(i) "Cathodic protection" means a technique to prevent the corrosion of a metal surface by making the surface the cathode of an electrochemical cell. This protection renders a metallic container or piping component negatively charged with respect to its environment. This protection shall be designed by a corrosion expert as defined by these rules.

(j) "Cathodic protection tester" means a person who can demonstrate an understanding of the principles and measurements of all common types of cathodic protection systems applicable to metal piping and container systems and who has education and experience in soil resistivity, stray current, structure-to-soil potential, and component electrical isolation

measurements of metal piping and container systems. The person shall be certified as being qualified by the national association of corrosion engineers (NACE) international.

(k) "Composite container" means a container fabricated of 2 or more materials that interact to facilitate the container design criteria.

(l) "Compression discharge pressure" means the varying pressure at the point of discharge from the compressor.

(m) "CGA" means the compressed gas association.

(n) "Container" means a pressure vessel or cylinder used to store H_2.

(o) "Container appurtenances" means devices connected to container openings for safety, control, or operating purposes.

(p) "Container system" means a container or combination of containers and all attached appurtenances, valves, and piping.

(q) "Container valve" means a valve connected directly to the container outlet.

(r) "Continuous gas detection system" means a gas detection system in which the instrument is maintained in continuous operation.

(s) "Corrosion expert" means a person who, by reason of thorough knowledge of the physical sciences and the principals of engineering and mathematics acquired by a professional education and related practical experience, is qualified to engage in the practice of corrosion control of container systems. The person shall be certificated as being qualified by NACE, as a senior corrosion technologist, a cathodic protection specialist, or a corrosion specialist or be a registered engineer who has certification and licensing that includes education and experience in corrosion control.

(t) "Corrosion protection" means protecting a container system to prevent the degradation of the metal through oxidation or reactivity with its environment.

(u) "Cylinder" means a container constructed in accordance with the United States Department of Transportation (U.S. DOT) specifications, title 49, code of federal regulations (CFR), parts 171-190.

(v) "Department" means the department of environmental quality.

(w) "Director" means the director of the department of environmental quality.

(x) "Dispensing station" means an H_2 installation that dispenses H_2 from storage containers into fuel supply containers or into portable cylinders by means of a compressor, reformer, vaporizer, or pressure booster.

(y) "Emergency shutdown device (ESD)" means a device that closes all fueling operations within the fueling facility from either local or remote locations.

(z) "Excess flow control" means to limit or stop the flow of H_2 gas from a source of supply when there is a rupture, break, or 'open valve to atmosphere' condition that may present a hazard to personnel or the environment.

(aa) "Fail-safe" means a design feature that provides for the maintenance of safe operating conditions in the event of a malfunction of control devices or an interruption of an energy source.

(bb) "Fast fill station" means a storage and dispensing system designed to fill motor vehicle fuel tanks with compressed, gasified H_2. The vehicle fuel tank is filled by connecting to a system designed to provide a fuel fill rate above 12 scfm.

(cc) "Fixed liquid level device" means a device that indicates when the container is filled to its maximum permitted liquid filling volume.

(dd) "Flow-through process container" means a container that forms an integral part of a production process through which there is a steady, variable, recurring, or intermittent flow of materials during the operation of the process and the container is utilized to carry out or control the heating, cooling, mixing, blending, separating, metering, or chemical reaction of materials. The processing is done on a regular basis and it is the primary function of the container. A flow-through process container does not include a container that is used for the storage of materials before its introduction into the production process or for the storage of finished products or by-products from the production process or a container that is only used to recirculate materials.

(ee) "Fuel dispenser system" means all the pumps, meters, piping, hose, and controls used for the delivery of fuel.

(ff) "Fueling connector" means a mating device at the refueling station, including shutoff valves that connect the fueling dispenser hose to the vehicle fuel filling system receptacle for the transfer of liquid or vapor.

(gg) "Gallon water capacity (wc)" means the amount of water in gallons at 60 degrees Fahrenheit (15 degrees Celsius) required to fill a container.

(hh) "Gas detection system" means a grouping of 1 or more sensors capable of detecting an H_2 leak at specified concentrations and activating alarms and safety systems.

(ii) "Gaseous H_2 system" means a system in which the H_2 is delivered, stored, and discharged in the gaseous form including the piping system. The gaseous H_2 system terminates at the point where the H_2 is dispensed.

(jj) "Hydrogen (H_2)" means the simplest and lightest element in the known universe, which exists as a gas except at low cryogenic temperatures.H_2 gas is a colorless, odorless and highly flammable gas when mixed with oxygen over a wide range of concentrations. H_2 forms water when combusted, or when otherwise joined with oxygen, as within a fuel cell.

(kk) "Hydrogen code" means the storage and handling of gaseous and liquefied H_2 rules as promulgated by the department.

(ll) "Hydrogen gas vehicle (HGV) or vehicle" means a self-propelled device on land, in, on, or by which any person or property is or may be transported or drawn upon, except for a device exclusively moved by human power, and which has the capability to use H_2 gas as an engine fuel.

(mm) "Ignition source" means any item or substance capable of an energy release of type and magnitude sufficient to ignite any flammable mixture of gases or vapors that could occur at the site.

(nn) "kPa" means absolute pressure in kilo-Pascals.

(oo) "kPag" means gauge pressure in kilo-Pascals.

(pp) "Labeled" means equipment or materials to which has been attached a label, symbol, or other identifying mark of an organization that is acceptable to the department and concerned with product evaluation, that maintains periodic inspection of production of labeled equipment or materials, and by whose labeling the manufacturer indicates compliance with accepted or approved standards of construction and or performance.

(qq) "Listed" means equipment, materials, or services included in a list published by an organization that is acceptable to the department and concerned with evaluation of products or services, that maintains periodic inspection of production listed equipment or materials or periodic evaluation of services, and whose listing states that either the equipment,

material, or service meets appropriate designated standards or has been tested and found suitable for a specified purpose.

(rr) "Manifolded storage system" means storage in containers arranged in banks where each bank acts as 1 large container. The banks are separated by switching valves to provide sequential drawdown of the banks. The bank may consist of 1 or more containers.

(ss) "Manual emergency shutoff valve" means a designated valve designed to shutoff flow due to a rupture in pressurized piping system.

(tt) "Maximum allowable working pressure (MAWP)" means the maximum pressure to which any component or portion of the pressure system can be subjected.

(uu) "Maximum operating pressure (MOP)" means the steady-state gauge pressure at which a part or system normally operates.

(vv) "Metal hydride storage system" means a system for the storage of H_2 gas absorbed in solid material.

(ww) "Motor fuel dispensing facility" means that portion of the property where H_2 is stored and dispensed from fixed equipment into the fuel tanks of motor vehicles, marine craft, or into approved containers, including all equipment used in connection therewith.

(xx) "NACE" means the national association of corrosion engineers, international.

(yy) "Original equipment manufacturer (OEM)" means an original equipment motor vehicle manufacturer that certifies that the motor vehicle complies with applicable federal motor vehicle safety codes.

(zz) "Partially buried container" means a container that has part of, but less than 100%, of the container surface covered with earth.

(aaa) "Point of transfer" means the point where the transfer connection is made.

(bbb) "Portable container" means a container designed to be moved readily, as distinguished from containers designed for stationary installations. Portable containers, designed for transportation with H_2, filled to their maximum filling limit, include "cylinders," "cargo tanks," and "portable tanks," all 3 of which are defined separately. Containers designed to be readily moved from 1 usage location to another, but substantially empty of product, are "portable storage containers" and are defined separately.

(ccc) "Portable storage container" means a container similar to those designed and constructed for stationary installation, designed so that it can be moved readily over the highways, substantially empty of H_2, from 1 usage location to another. Such containers either have legs or other supports attached, or are mounted on running gear, such as trailer or semitrailer chassis, with suitable supports that can be of the fold-down type, allowing them to be placed or parked in a stable position on a reasonably firm and level surface. For large-volume, limited-duration product usage, such as at construction sites and normally for 6 months or less, portable storage containers function in lieu of permanently installed stationary containers.

(ddd) "Portable tank, or skid tank" means a container of more than 1,000 lb (454 kilogram) water capacity used to transport H_2, handled as a package, that is, filled to its maximum permitted filling limit. Such containers are mounted on skids or runners and have all container appurtenances protected in such a manner that they can be safely handled as a package.

(eee) "Pressure relief device (PRD)" means a pressure or temperature activated device used to prevent pressure from rising above a specified value and thereby prevent the rupture

of a normally charged pressure vessel or a cylinder due to emergency or abnormal conditions.

(fff) "Pressure vessel" means a container or other component designed in accordance with the ASME code.

(ggg) "psi" means pounds per square inch.

(hhh) "psia" means pounds per square inch, absolute.

(iii) "psig" means pounds per square inch gauge.

(jjj) "Rated pressure" means the pressure to which a component is rated provided that the MAWP is observed for temperature extremes.

(kkk) "Release" means an unexpected discharge of H_2.

(lll) "Remotely located manually activated shutdown control" means a control system that is designed to initiate shut down of the flow of gas or liquid that is manually activated from a point located some distance from the delivery system.

(mmm) "Residential fueling facility" means a listed vehicle fueling appliance used for the compression and delivery of H_2 into vehicles at a residence which includes its associated equipment and piping.

(nnn) "Service pressure" means the nominal gas pressure at a uniform gas temperature of 70 degrees Fahrenheit (21 degrees Celsius) when the equipment is properly and completely charged with gas; the nominal design pressure for which the equipment has been constructed.

(ooo) "Set pressure" means the start-to-discharge pressure for which a relief valve is set and marked.

(ppp) "Standard cubic foot per minute (scfm)" means the amount of gas flow in standard cubic feet per minute compensated for pressure and temperature.

(qqq) "Substantially empty" means a gas container of H_2 when the residual gas pressure is less than 10% of the maximum allowable working pressure of the vessel.

(rrr) "Vehicle-fueling appliance" means a self-contained listed assembly used for the compression and delivery of H_2 gas into vehicles including associated equipment and piping of the appliance.1-5.1 NFPA official definitions.Combustible Liquid. A liquid having a closed-cup flash point at or above 100°
F (37.8°C) and are subdivided as follows:

(a) Class II liquids include those having a flash point at or above 100°F (37.8°C) and below 140°F (60°C).

(b) Class IIIA liquids include those having a flash point at or above 140°F (60°C) and below 200°F (93.4°C).

(c) Class IIIB liquids include those having a flash point at or above 200°F (93.4°C). Flammable Liquid (Class I). Any liquid having a closed-cup flash point below 100°F (37.8°C) and having a vapor pressure not exceeding 40 psia (276 kPa) at 100°F (37.8°C). Gallon. A standard U.S. gallon. Limited-Combustible Material. A material, as defined in NFPA 220, Standard on Types of Building Construction, not complying with the definition of noncombustible material that, in the form in which it is used, has a potential heat value not exceeding 3500 Btu/lb (8141 kJ/kg) and complies with one of the following paragraphs (a) or (b). Materials subject to an increase in combustibility or flame spread rating, beyond the limits herein established, through the effects of age, moisture, or other atmospheric condition are considered combustible.

(a) Materials having a structural base of noncombustible material, with a surfacing not exceeding a thickness of 1/8 in. (3.2 mm) that has a flame spread rating not greater than 50.

(b) Materials, in the form and thickness used, other than as described in (a), having neither a flame spread rating greater than 25 nor evidence of continued progressive combustion and of such composition that surfaces that would be exposed by cutting through the material on any plane would have neither a flame spread rating greater than 25 nor evidence of continued progressive combustion. Noncombustible Material. A material, as defined in NFPA 220, Standard on Types of Building Construction, that, in the form in which it is used and under the conditions anticipated, will not ignite, burn, support combustion, or release flammable vapors when subjected to fire or heat. Materials reported as noncombustible, when tested in accordance with ASTM E 136, Standard Method of Test for Behavior of Materials in a Vertical Tube Furnace at 750°C, are considered noncombustible materials. Outdoors. Location outside of any building or structure or locations under a roof, weather shelter, or canopy provided this area is not enclosed on more than two sides.

Separate Building. A detached, noncommunicating building used exclusively to house a hydrogen system. Shall. Indicates a mandatory requirement. Special Room. A separate enclosed area that is part of or attached to another building and is used exclusively for an H_2 system. Standard. A document, the main text of which contains only mandatory provisions using the word "shall" to indicate requirements and which is in a form generally suitable for mandatory reference by another standard or code or for adoption into law. Nonmandatory provisions shall be located in an appendix, footnote, or fine-print note and are not to be considered a part of the requirements of a standard. Standard Cubic Foot (scf). One cubic foot of gas at 70°F (21°C) and 14.7 psia (an absolute pressure of 101 kPa).

History: 2008 AACS.

R 29.7015 Equivalency.

Rule 15. Sections 1-6 to 1-6.3 of the storage and handling of gaseous and Liquefied H_2 code are added as follows:

1-6 Equivalency.

1-6.1 Nothing in this H_2 code shall be intended to prevent the use of systems, methods, or devices having equivalent or superior quality, strength, fire resistance, effectiveness, durability, environmental protection capability, or safety over those prescribed by the H_2 code, if technical documentation is submitted to the department to demonstrate equivalency and the system, method, or device is approved for the intended purpose.

1-6.2 An owner or operator may make an application for a variance of rules by applying to the department with a satisfactory explanation of why compliance is not possible. The department may approve the variance request upon finding that the variance is based upon the best interest of public health, safety, and welfare and the environment.

1-6.3 A person aggrieved by a final decision of the department on a request for variance or an equivalency determination may appeal to the circuit court within 21 days of receiving the decision.

History: 2008 AACS.

R 29.7016 Prohibitions.

Rule 16. Sections 1-7 to 1-7.4 of the storage and handling of gaseous and Liquefied H_2 code are added as follows:

1-7 Prohibitions.

1-7.1 Any H_2 storage container system or practice that is not in compliance with these rules shall be considered to be in violation of these rules.

1-7.2 Upon notification by the department, a person shall not deliver H_2 to a storage container system under any circumstances that are prohibited by these rules or if a container is not in compliance with these rules. Such notification may include a verbal or written communication or an affixed written notification on the H_2 system.

1-7.3 A person shall not tamper with, remove, or disregard written notification affixed to the storage container system.

1-7.4 An owner or operator shall not continue to use a storage container system that is causing a release and shall expeditiously empty the system or the component that is causing the release until the system is repaired or replaced.

History: 2008 AACS.

R 29.7017 Installation application.

Rule 17. Sections 1-8 to 1-8.4 of the storage and handling of gaseous and Liquefied H_2 code are added as follows:

1-8 Installation application.

1-8.1 An application for plan review shall be submitted, on a form provided by the department, by the owner or owner's designee on behalf of the owner to the department not less than 30 days before the installation of an H_2 storage container system.

1-8.1.1 The installation application shall include all of the following information:

(a) A plot map showing all of the following within 100 feet (30.5 meters) of any portion from the container system:

(i) The location of the following:

(A) Buildings.

(B) Public roadways.

(C) Railroad mainlines.

(D) Public sidewalks.

(E) Overhead power lines.

(ii) The proposed location of the dispensing station.

(iii) The location of property lines.

(iv) The locations of existing aboveground and underground tanks storing flammable and combustible liquids, and flammable, compressed or liquefied gases.

(v) The location of the point of transfer in relationship to all of the following:

(A) The container.

(B) Buildings.

(C) Public ways.

(D) Outdoor places of public assembly.

(E) Driveways.

(F) Main line railroad track center lines.
(G) The line of adjoining property that may be built upon.
(H) Aboveground and underground tanks storing flammable and combustible liquids and/or flammable, compressed, or liquefied gases.
(b) The construction material, the dimensions and the capacity of each container.
(c) The type of container venting and pressure relief.
(d) The compressor(s) size (psig and scfm).
(e) Container appurtenances.
(f) A piping diagram showing sizes, valves, pressure relief and fittings, and control devices.
1-8.2 Upon acknowledged receipt of the plans, the department shall issue a plan review report within 30 days. If the plan review report is not issued within 30 days, the installation may be constructed according to the submitted plans and shall comply with these rules.
1-8.3 An applicant shall notify the department upon completion of the installation before the installation is placed into service. The department shall inspect the installation after receiving notification and shall certify the installation, if the requirements of the rules are met. If the inspection is not made within 2 working days, then the applicant may place the installation into service, or if intended to be underground, mounded, or partially underground, may cover the installation from sight, and shall notify the department, and shall submit a notarized affidavit to the department attesting to the fact that the installation complies with the installation application submitted and the applicable rules.
1-8.4 Upon the owner's request, all plans and specifications that are submitted to the department for review shall be returned after the department has certified the installation or within 30 working days after notification to the department of the completion of the installation. Plans and specifications may be marked "Confidential-Do Not Copy" at the time they are submitted.

History: 2008 AACS.

R 29.7018 Installation application fees and annual certification.

Rule 18. Sections 1-9 to 1-9.2 of the storage and handling of gaseous and Liquefied H_2 code are added as follows:
1-9 Installation application fees and annual certification.
1-9.1 Only an owner of an H_2 container system for which an installation application is required to be submitted under section 1-8 of the H_2 code shall be required to pay fees as specified in section 5 of 1941 PA 207, MCL 29.5.
1-9.2 For the purpose of assessing fees on permanent installations, each 26,000 scf storage capacity of H_2 or increment thereof, shall be considered a container or any container filling location, as used in section 5 of 1941 PA 207, MCL 29.5.

History: 2008 AACS.

R 29.7019 Personnel.

Rule 19. Sections 1-10 to 1-10.1 of the storage and handling of gaseous and Liquefied H_2 code are added as follows:

1-10 Personnel.
1-10.1 In the interest of safety, all persons involved in handling H_2 shall be trained in the proper handling and operating procedures. This training shall be acceptable to the department.
Exception: This training is not required for a person dispensing H_2 into a vehicle at an attended self-service facility.

History: 2008 AACS.

Chapter 2 Design of Gaseous Hydrogen Systems

R 29.7020 Containers.

Rule 20. Section 2-1.3 is reproduced from NFPA 50A, and sections 2-1, 2-1.1, 2-1.2, and 2-1.4 to 2-1.8.2 of the storage and handling of gaseous and Liquefied H_2 code are added as follows:
2-1 Containers.
2-1.1 H_2 containers shall comply with 1 of the following:
(a) Designed, constructed, and tested in accordance with appropriate requirements of ASME International, "Boiler and Pressure Vessel Code," Section VIII, "Rules for the construction of pressure vessels," adopted by reference in section 8-1.
(b) Designed, constructed, tested, and maintained in accordance with Title 49, CFR.
(c) Metal hydride storage systems shall be listed for the application and designed in a manner that prevents the removal of the metal hydride.
(d) When allowed by the department, fully over-wrapped carbon composite containers designed to a standard acceptable to the department based on the best interest of public health, safety, and the environment.
2-1.2 Permanently installed aboveground containers shall be provided with substantial supports, constructed of noncombustible material on firm foundations of noncombustible material, and shall comply with the following subsections as applicable:
(a) Steel supports in excess of 18 inches (45.72 centimeters) in height, shall have a minimum 2-hour fire resistance rating, see figure 2-1.2.
Exception: Supports may be greater than 18 inches (45.72 centimeters) if owner demonstrates, to the satisfaction of the department, that the container will not be exposed to a 2-hour pool fire.
(b) If a permanently installed aboveground container is in an area that is subject to buoyant forces, provision shall be made to prevent the container, either full or empty, from floating during a rise in water level, including up to the established maximum flood stage.
(c) Horizontally installed containers shall have not more than 2 points of support longitudinally or other methods approved by the department based on the best interest of public health, safety, and welfare and the environment.
(d) Horizontally installed containers shall not be in direct contact with each other.
(e) Composite containers shall be protected from UV radiation as required in the manufacturer's specifications.
(f) Aboveground containers shall be protected by painting or other equivalent means where necessary to inhibit corrosion.

Exception: Composite containers shall not be painted without prior permission from the container manufacturer.

(g) Welding or brazing for the repair or alteration of an ASME pressure vessel shall comply with the standard adopted in section 8-1.2.1.

(h) Other welding or brazing shall be permitted only on saddle plates, lugs, or brackets which are attached to the pressure vessel by the pressure vessel manufacturer.

(i) The exchange or interchange of pressure vessel appurtenances intended for the same purpose shall not be considered a repair or alteration and appurtenances must comply with these rules.

Figure 2-1.2

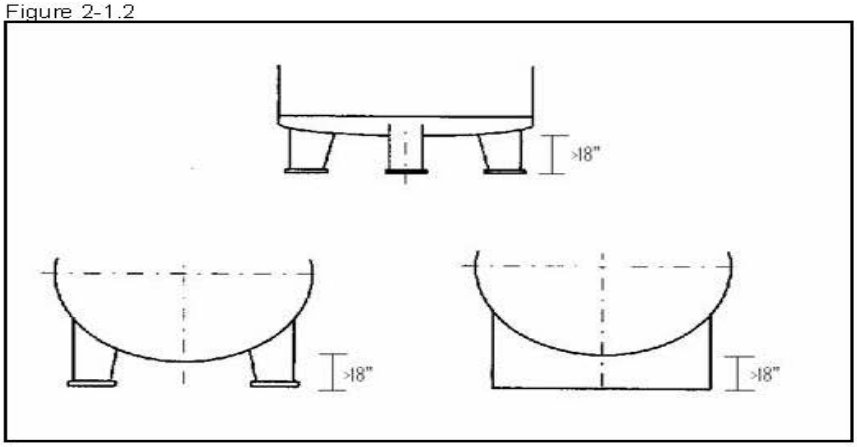

2-1.3 Each portable container shall be legibly marked with the name hydrogen in accordance with ANSI/CGA C-4, Method of Marking Portable Compressed Gas Containers to Identify the Material Contained. Each manifold hydrogen supply unit shall be legibly marked with the name hydrogen or a legend such as "This unit contains hydrogen."

2-1.4 An owner or operator that has had a container subjected to heat exposure due to fire shall remove the container from service, unless the owner or operator provides documentation of recertification in accordance with section 2-1.1, to the department substantiating container integrity.

2-1.5 Guard posts or other approved means shall be provided to protect a container system subject to vehicular damage. When guard posts are installed, all of the following design specifications shall be met:

(a) Guard posts shall be constructed of steel not less than 4 inches (10.16 centimeters) in diameter and shall be filled with concrete.

(b) Guard posts shall be spaced not more than 4 feet (1.2 meters) on center.

(c) Guard posts shall be set not less than 4 feet (1.2 meters) deep in a concrete footing that is not less than 15 inches (38.1 centimeters) in diameter.

(d) Guard posts shall be not less than 4 feet (1.2 meters) in height above grade.

(e) Other means as approved by the department based on the best interests of public health, safety, and welfare and the environment.

2-1.6 Physical protection. Containers, piping, valves, pressure-relief devices, regulating equipment, and other appurtenances shall be protected against physical damage and tampering.
2-1.7 Portable containers subject to shifting or upset shall be secured. Nesting may be used to secure portable containers.
2-1.8 Underground containers. Underground containers for the storage of gaseous H_2 shall be in accordance with this subsection.
2-1.8.1 Construction. Storage containers for gaseous H_2 shall be designed and constructed in accordance with Section VIII of ASME International, "Boiler and Pressure Vessel Code," adopted by reference in section 8-1, and shall be vacuum-jacketed in accordance with section 2-1.10.1.1.
2-1.8.2 Corrosion Protection. The underground container shall be protected by an engineered corrosion protection system designed by a corrosion expert. If cathodic protection is used the maintenance schedule shall meet the requirements of section 5-4.

History: 2008 AACS.

R 29.7021 Pressure relief devices.

Rule 21. Section 2-2.3 is reproduced from NFPA 50A, and sections 2-2, 2-2.1, 2-2.2, and 2-2.4 to 2-2.7.1 of the storage and handling of gaseous and Liquefied H_2 code are added as follows:
2-2 Pressure relief devices.
2-2.1 H_2 containers shall be protected from credible overpressure scenarios by a relief device installed in accordance with the ASME International, "Boiler Pressure Vessel Code," section VIII division 1 sections UG 125 through 137, adopted by reference in section 8-1. When all credible overpressure sources are external to the container, the relief device(s) need not be installed directly on the container. In such cases, the relief devices may be installed in the piping between the container and the source(s) of overpressure and a block valve may be installed between the relief device(s) and container, provided the source of overpressure is blocked from the container.
2-2.1.1 Fully over-wrapped carbon composite containers shall be protected by thermally activated pressure relief devices acceptable to the department based on the best interests of public health, safety, welfare and the environment.
2-2.2 Pressure relief devices, when installed, shall be arranged to discharge upward and unobstructed to the open air in such a manner as to prevent any impingement of escaping gas upon the container, adjacent structures, or personnel. The vent and piping system from relief device(s) shall be designed and installed in accordance with CGA G-5.5.
2-2.3 Pressure relief devices or vent piping shall be designed or located so that moisture cannot collect and freeze in a manner that would interfere with proper operation of the device.
2-2.4 Pressure relief valves for gaseous H_2 service shall not be fitted with manual relief (lifting devices).
2-2.5 Pressure relief valves for gaseous H_2 systems, if externally adjustable, shall be provided with a means for sealing the adjustment to prevent tampering.

2-2.5.1 If at any time it is necessary to break such a seal, the valve shall be removed from service until it has been reset and sealed in accordance with design, certification, and installation code specified in section 2-2.1.
2-2.6 Pressure relief valves shall be tested at least every 5 years.
Exception: Non-ASME relief valves used for blocked-in portions of piping as thermal relief valves will not be tested.
2-2.7 Excess flow control shall be provided for pressurized H_2 piping systems above 15 psig when system design allows their application to add a significant measure of safety for break, rupture, or open valve (to atmosphere) conditions.
2-2.7.1 The location of excess flow control shall be as specified as in either of the following situations:
(a) Where piping originates from a source located in a room or area, the excess flow control shall be located within the same room or area.
(b) Where piping originates from a bulk source, the excess flow control shall be as close to the bulk source as possible.
Exception: The above requirements shall not apply to piping for inlet connections designed to prevent backflow, piping pressure relief devices, or systems containing 450 scf of H_2 gas or less.

History: 2008 AACS.

R 29.7022 Piping, tubing, and fittings.

Rule 22. Sections 2-3.1 is reproduced from NFPA 50A, and sections 2-3.1.1, 2-3.1.2, and 2-3.2 to 2-3.13 of the storage and handling of gaseous and Liquefied H_2 code are added as follows:
2-3 Piping, tubing, and fittings.
2-3.1 Piping, tubing, and fittings shall be suitable for H_2 service and for the pressures and temperatures involved. Cast-iron pipe and fittings shall not be used.
2-3.1.1 A piping system shall be substantially supported and protected against physical damage and excessive stresses arising from settlement, vibration, expansion, or contraction. Supports for aboveground piping shall be constructed of noncombustible material.
2-3.1.2 Aboveground piping systems shall be protected from corrosion in compliance with recognized standards. Underground piping systems shall be in compliance with section 5-4.
2-3.2 Material specifications and thickness requirements for piping and tubing shall conform to ASME B31.3, "Process Piping," adopted by reference in section 8-1.
2-3.3 Brazing materials shall have a melting point above 1,000 degrees Fahrenheit (538 degrees Celsius). Flanged connection shall use a gasket that is suitable for H_2. When making joints in piping and tubing, thread sealants, when used, shall be suitable for H_2 service and shall be applied to male pipe threads prior to assembly.
2-3.4 Aboveground piping systems shall be marked in accordance with the following:
(a) Marking shall include the name of the gas and direction of flow arrow.
(b) Marking for piping systems shall be provided at the following locations:
(i) At each critical process control valve.
(ii) At wall, floor, or ceiling penetrations.

(iii) At each change in direction.
(iv) At a minimum of every 20 feet (6.1 meters) or fraction thereof throughout the piping run.
2-3.5 Threaded or flanged connections shall not be used in areas other than outdoors.
2-3.6 Underground piping shall be installed on a bedding of at least 6 inches (15.24 centimeters) of well-compacted backfill material.
2-3.7 In areas subject to vehicle traffic, the pipe trench shall be of sufficient depth to permit a cover of not less than 18 inches (45.72 centimeters) of well compacted backfill material and pavement.
Exception 1: In paved areas where a minimum of 8 inches (20.32 centimeters) of asphalt paving is used, the depth of the backfill between the topmost tier of piping and the paving may be reduced to not less than 8 inches (20.32 centimeters).
Exception 2: In paved areas where a minimum of 6 inches (15.24 centimeters) of reinforced concrete paving is used, the depth of backfill between the topmost tier of the piping and the paving may be reduced to not less than 4 inches (10.16 centimeters).
2-3.8 In areas not subject to vehicle traffic, the pipe trench shall be of sufficient depth to permit 6 inches (15.24 centimeters) each of bedding and cover of well-compacted backfill material. A greater burial depth shall be provided when required by the manufacturer's instructions.
2-3.9 Piping within the same trench shall be separated by more than 3 times the diameter of the larger adjacent pipe.
2-3.10 Piping to equipment shall be provided with an accessible, manual shutoff valve.
2-3.11 Pipe, tubing, fittings, and other piping components shall be capable of withstanding a hydrostatic test of at least 3 times the rated service pressure without structural failure as documented by the manufacturer.
2-3.12 All natural gas piping shall be installed in accordance with R 29.4601 et seq.
2-3.13 All liquefied petroleum gas piping shall be installed in accordance with R 29.4001 et seq.

History: 2008 AACS.

R 29.7023 Equipment assembly.

Rule 23. Sections 2-4 to 2-4.6 are reproduced from NFPA 50A, and sections 2-4.7 to 2-4.10 of the storage and handling of gaseous and Liquefied H_2 code are added as follows:
2-4 Equipment assembly.
2-4.1 Valves, gauges, regulators, and other accessories shall be recommended for H_2 service by the manufacturer or the H_2 supplier.
2-4.2 Installation of H_2 systems shall be supervised by personnel familiar with proper practices with reference to their construction and use.
2-4.3 Storage containers, piping, valves, regulating equipment, and other accessories shall be accessible and shall be protected against physical damage and against tampering by the general public.
2-4.4 Cabinets or housings containing H_2 control or operating equipment shall be ventilated to minimize accumulation of H_2.
2-4.5 Each mobile H_2 supply unit used as part of an H_2 system shall be secured to prevent movement.

2-4.6 Mobile H_2 supply units shall be electrically bonded to the system before discharging H_2.
2-4.7 Emergency shutoff valves shall be approved and shall incorporate all of the following means of closing:
(a) Automatic shutoff through thermal (fire) actuation. Where fusible elements are used, they shall have a melting point not exceeding 250 degrees Fahrenheit (121 degrees Celsius).
(b) Manual shutoff from a remote location.
(c) Manual shutoff at the installed location.
2-4.8 The fill line, when it is independent of the withdraw line on a storage container, shall be equipped with a backflow check valve located as close as practical to the container to prevent discharge of H_2 from the container in case of the rupture of the line, hose, or fittings.
2-4.9 Where excess-flow check valves are used, the closing flow shall be greater than the maximum system design flow rate and less than the flow rating of the piping system that results from a complete line failure between the excess-flow check valve and the equipment downstream of the excess-flow check valve.
2-4.10 Gas piping from an outdoor compressor or storage system into a building shall be provided with shutoff valves located outside the building. The shutoff valves shall be readily accessible and as close as practical to the building. Each valve shall be permanently identified.

History: 2008 AACS.

R 29.7024 Marking.

Rule 24. Sections 2-5 to 2-5.4 of the storage and handling of gaseous and Liquefied H_2 code are added as follows:
2-5 Marking. Gaseous H_2 containers and systems shall be marked in accordance with this section.
2-5.1 Identification of contents. Each container shall be marked as follows: "GASEOUS HYDROGEN - FLAMMABLE GAS" in letters that are not less than 3 inches (76 millimeters) in height.
2-5.2 Container specification. Stationary containers shall be marked with the manufacturing specification and maximum allowable working pressure on a permanent nameplate in accordance with the standard to which the container was manufactured.
2-5.3 Portable containers. Portable containers shall be marked in accordance with CGA C-7, "Guide to the Preparation of Precautionary Labeling and Marking of Compressed Gas Containers," adopted by reference in section 8-1.
2-5.4 Stationary containers. Stationary containers shall be marked in accordance with NFPA 704, "Standard Systems for the Identification of the Hazards of Materials for Emergency Response," adopted by reference in section 8-1.

History: 2008 AACS.

R 29.7025 Testing.

Rule 25. Section 2-6 is reproduced from NFPA 50A, and section 2-6.1 of the storage and handling of gaseous and Liquefied H_2 code is added as follows:
2-6 Testing. After installation, all piping, tubing, and fittings shall be tested and proved H_2 gas-tight at maximum operating pressure.
2-6.1 Containers, if out of service in excess of 1 year, shall be inspected and tested as outlined in section 2-6. The pressure relief devices shall be checked to determine if they are operable and properly set.

History: 2008 AACS.

R 29.7026 Approval.

Rule 26. Sections 2-7 and 2-7.1 of the storage and handling of gaseous and Liquefied H_2 code are added as follows:
2-7 Approval.
2-7.1 Systems and all system components shall be listed or approved, including, but not limited to all of the following:
(a) Container.
(b) Pressure relief device, including a pressure relief valve.
(c) Pressure gauge.
(d) Pressure regulator.
(e) Valve.
(f) Hose and hose connection.
(g) Vehicle fueling connection.
(h) Electrical equipment related to the H_2 system.
(i) Dispenser.
(j) Emergency shutoff valves.
(k) Metal hydride storage.
(l) Gas detection equipment and alarms.
(m) H_2 generators.
(n) Pumps or compressor.
(o) Stationary engine fuel system.

History: 2008 AACS.

R 29.7027 Pressure gauges.

Rule 27. Section 2-8 of the storage and handling of gaseous and Liquefied H_2 code is added as follows:
2-8 Pressure gauges. A pressure gauge, if provided, shall be capable of reading at least 1.2 times the system MAWP.

History: 2008 AACS.

R 29.7028 Pressure regulators.

Rule 28. Sections 2-9 to 2-9.3 of the storage and handling of gaseous and Liquefied H_2 code are added as follows:
2-9 Pressure regulators.
2-9.1 A pressure regulator inlet and each chamber shall be designed for its service pressure with a safety factor of at least 3.
2-9.2 Pressure chambers shall provide for overpressure relief, if required.
2-9.3 Regulators shall be designed, installed, or protected so that their operation is not affected by freezing rain, sleet, snow, ice, mud, insects, or debris. Regulator protection may be integral with the regulator.

History: 2008 AACS.

R 29.7029 Valves.

Rule 29. Sections 2-10 to 2-10.2 of the storage and handling of gaseous and Liquefied H_2 code are added as follows:
2-10 Valves.
2-10.1 Shutoff valves shall have a rated service pressure not less than the rated service pressure of the entire system and shall be capable of withstanding a hydrostatic test of at least 3 times the rated service pressure without rupture.
2-10.1.1 Leakage shall not occur when tested at least 1.1 times the rated service pressure, using an inert gas compatible with industry practices.
2-10.2 Valves of a design that allows the valve stem to be removed without removal of the complete valve bonnet or without disassembly of the valve body shall not be used.

History: 2008 AACS.

R 29.7030 Hose and hose connections.

Rule 30. Sections 2-11 to 2-11.6 of the storage and handling of gaseous and Liquefied H_2 code are added as follows:
2-11 Hose and hose connections.
2-11.1 Hose shall be constructed of or lined with materials that are resistant to corrosion and compatible with H_2.
2-11.2 Hose, metallic hose, flexible metal hose, tubing, and their connections shall be designed for the most severe pressures and temperatures expected under normal operating conditions with a burst pressure of at least 3 times the service pressure.
2-11.3 Prior to use, hose assemblies shall be tested by the manufacturer or its designated representative at a pressure at least 1.1 times the service pressure.
2-11.4 Hose and metallic hose shall be distinctly marked by the manufacturer either by the manufacturer's permanently attached tag or by distinct markings indicating the manufacturer's name or trademark, applicable service identifier and design pressure.
2-11.5 The use of hose in an installation shall be limited to only the following applications:
(a) Vehicle fueling hose.
(b) Inlet connection to compression equipment.
(c) Section of metallic hose not exceeding 36 inches in length in the pipeline to provide flexibility where necessary.

2-11.6 Each section shall be so installed that it is protected against mechanical damage and is readily visible for inspection.

History: 2008 AACS.

R 29.7031 Vehicle fueling connection.

Rule 31. Sections 2-12 to 2-12.2 of the storage and handling of gaseous and Liquefied H_2 code are added as follows:

2-12 Vehicle fueling connection.

2-12.1 Fueling receptacles and nozzles for gaseous H_2 service shall be listed or approved in accordance with a standard acceptable to the department and based on the best interest of public health, safety, and welfare and the environment.

2-12.2 The use of adapters shall be prohibited.

History: 2008 AACS.

R 29.7032 Temporary installations.

Rule 32. Sections 2-13 and 2-13.1 of the storage and handling of gaseous and Liquefied H_2 code are added as follows:

2-13 Temporary installations.

2-13.1 ASME or U.S. DOT containers that are used as portable storage containers, (see definition of portable container in section 1-5), for temporary, less than 6 months at any given location, stationary service shall comply with the following:

(a) If mounted on legs or supports, then such supports shall be of steel and either shall be welded to the container by the manufacturer at the time of fabrication or shall be attached to lugs that have been so welded to the container. The legs or supports or the lugs for the attachment of these legs or supports shall be secured to the container in accordance with the code or rule under which the container was designed and built to withstand loading in any direction equal to twice the weight of the empty container and attachments.

(b) If the container is mounted on a trailer or semi-trailer running gear so that the unit can be moved by a conventional over-the-road tractor, then attachment to the vehicle, or attachments to the container to make it a vehicle, shall comply with the appropriate U.S. DOT requirements for cargo tank service. The unit also shall comply with applicable state and U.S. DOT motor carrier regulations and shall be approved by the department.

History: 2008 AACS.

Chapter 3 Location of Gaseous Hydrogen Systems

R 29.7033 General requirements.

Rule 33. Sections 3-1.1, and 3-1.4 are reproduced from NFPA 50A, and sections 3-1.2, 3-1.3, and 3-1.5 to 3-1.10 of the storage and handling of gaseous and Liquefied H_2 code are added as follows:

3-1 General requirements.
3-1.1 The system shall be located so that it is accessible to delivery equipment and to authorized personnel. Roadways or other means of access for emergency equipment, such as fire department apparatus, shall be provided.
3-1.2 Above ground systems shall be located either at grade or above grade.
3-1.3 Aboveground systems shall not be located beneath or where exposed to failure of the following:
(a) Electric power lines as follows:
(i) Not less than 50 feet (15.24 meters) horizontally from the vertical plane below the nearest overhead wire of an electric trolley, train, or bus line.
(ii) Not less than 5 feet (1.52 meters) horizontally from the vertical plane below the nearest overhead electrical wire.
(b) Piping containing all classes of flammable or combustible liquids, see definition in Section 1-5.
(c) Piping containing oxidizing materials.
3-1.4 Systems within 50 feet (15.24 meters) of aboveground storage of all classes of flammable and combustible liquids shall be located on ground higher than such storage, except where dikes, diversion curbs, grading, or separating solid walls are used to prevent accumulation of these liquids under the system.
3-1.5 Underground systems shall be located underground, mounded, or partially buried and outside of any buildings. Buildings shall not be constructed over any underground, mounded, or partially buried container. Sides of adjacent containers shall be separated by not less than 3 feet (1 meter) unless approved by the department.
(a) Excavation for underground, mounded, or partially buried containers shall be made with due care to avoid damage to an existing structure or its foundation. Containers shall not be installed where loads from adjacent structures may be transmitted to the container. A structure or foundation of a structure on the same property shall not be erected or constructed within 10 feet (3.1 meters) of any point on the container surface, unless the footings extend to the bottom of the container. A container shall not be installed less than 10 feet (3.1 meters) from the nearest wall of any basement, pit, or property line.
3-1.6 All underground containers shall be set on firm foundation and surrounded with 6 inches (15.24 centimeters) minimum of noncorrosive inert material such as clean sand or pea gravel.
3-1.7 Underground or mounded containers shall be covered with not less than 2 feet (0.6 meter) of earth or with not less than 1 foot (30.48 centimeters) of earth on top of which shall be placed a reinforced concrete slab not less than 4 inches (10.16 centimeters) thick. If containers are likely to be subjected to traffic, they shall be protected against damage from vehicles passing over them by at least 3 feet (1 meter) of earth cover plus 6 inches (15.24 centimeters) of reinforced concrete. When reinforced concrete paving
is used as part of the protection, it shall extend at least 1 foot (30.48 centimeters) horizontally beyond the outline of the container in all directions
3-1.8 Containers installed in an area subject to flooding, high water table, or other buoyant forces shall be safeguarded from movement by anchoring or other means acceptable to the department based on the best interests of public health, safety, and welfare and the environment.

3-1.9 Aboveground gaseous H_2 systems shall be fenced and posted to prevent entrance by unauthorized personnel.
Exception: Gaseous H_2 dispensers may be located outside the fence.
3-1.10 Underground installations shall be deemed to provide engineered protection from overhead power lines.

History: 2008 AACS.

R 29.7034 Specific requirements.

Rule 34. Sections 3-2.1, 3-2.4, 3-2.5, and table 3-2.1 are reproduced from NFPA 50A, and table 3-2.2, sections 3-2.2, 3-2.3 and 3-2.6 to 3-2.9 of the storage and handling of gaseous and Liquefied H_2 code are added as follows:
3-2 Specific requirements.
3-2.1 The location of a system, as determined by the maximum total contained volume of H_2, shall be in the order of preference as indicated by Roman numerals in table 3-2.1.

Table 3-2.1
Preferred Locations of Gaseous Hydrogen Systems

Nature of Location	Size of Hydrogen System		
	Less than 3500 scf (99 m^3)	3500 scf to 15,000 scf (99 m^3 to 425 m^3)	In Excess of 15,000 scf (425 m^3)
Outdoors	I	I	I
In a separate building	II	II	II
In a special room	III	III	Not permitted
Inside buildings not in a special room or exposed to other occupancies	IV	Not permitted	Not permitted

3-2.2 The minimum distance in feet from an H_2 system of indicated capacity located either outdoors, in separate buildings, or in special rooms to any specified outdoor exposure shall be in accordance with table 3-2.2. The distances in numbers 1, 3 to 10, and 14 inclusive in table 3-2.2 shall not apply where protective structures having a minimum fire resistance rating of 2 hours are located between the system and the exposure.
(a) An aboveground H_2 storage container system shall be erected per table 3-2.2, but not less than 50 feet (22.9 meters), from any of the following:
A school.
A church.
A hospital.
A theater.

Assembly occupancy for 50 or more persons.
Exception: The restrictions in section 3-2.2(a) shall not apply to an aboveground H_2 system used exclusively for stationary power generation.

Table 3-2.2
Minimum Distance from Outdoor Gaseous Hydrogen Systems to Exposures

Total Gaseous Hydrogen Storage			
Type of Outdoor Exposure	Less than 3500 scf (99 m^3) Feet (meter)	3500 scf to 15,000 scf (99 m^3 to 425 m^3) Feet (meter)	In excess of 15,000 scf (425 m^3) Feet (meter)
1. Building or structure (a) Wall(s) adjacent to system constructed of noncombustible or limited-combustible materials (1) Sprinklered building or structure or unsprinklered building or structure having noncombustible contents	0[a] (0)	5[a] (1.5)	5[a] (1.5)
(2) Unsprinklered building or structure with combustible contents Adjacent wall(s) with fire resistance rating less than 2 hours[b]	0[c] (0)	10 (3.1)	25[d] (7.6)
Adjacent wall(s) with fire resistance rating of 2 hours or greater[b]	0 (0)	5 (1.5)	5 (1.5)
(b) Wall(s) adjacent to system constructed of other than noncombustible or limited-combustible materials	10 (3.1)	25 (7.6)	50[d] (15.2)
2. Wall openings (a) Not above any part of a system	10 (3.1)	10 (3.1)	10 (3.1)
(b) Above any part of a system	25 (7.6)	25 (7.6)	25 (7.6)
3. All classes of flammable and combustible liquids above ground (a) 0-1000 gal (3785L)	10 (3.1)	25 (7.6)	25 (7.6)
(b) In excess of 1000 gal (3785L)	25 (7.6)	50 (15.2)	50 (15.2)
4. All classes of flammable and combustible liquids below ground 0-100 gal (3785L)[e] (a) Tank	10 (3.1)	10 (3.1)	10 (3.1)
(b) Vent or fill opening of tank	25 (7.6)	25 (7.6)	25 (7.6)

5. All classes of flammable and combustible liquids below ground – in excess of 1000 gal (3785L)[e] (a) Tank	20 (6.1)	20 (6.1)	20 (6.1)
(b) Vent of fill opening of tank	25 (7.6)	25 (7.6)	25 (7.6)
6. Flammable gas storage (other than H_2), either high pressure or low pressure (a) 0-15,000 scf (255 m[e]) capacity	10 (3.1)	25 (7.6)	25 (7.6)
(b) In excess of 15,000 scf (255 m[e]) capacity	25 (7.6)	50 (15.2)	50 (15.2)
7. Oxygen storage (a) 20,000 scf (566 m[e]) or less	Refer to NFPA 51, *Standard for the Design and Installation of Oxygen-Fuel Gas Systems for Welding, Cutting, and Allied Processes*		
(b) More than 20,000 scf (566 m[e])	Refer to NFPA 55, *Standard for the Storage, Use, and Handling of Compressed Gases and Cryogenic Fluids in Portable and Stationary Containers, Cylinders, and Tanks*		
8. Fast-burning solids such as ordinary lumber, excelsior, or paper	50 (15.2)	50 (15.2)	50 (15.2)
9. Slow-burning solids such as heavy timber or coal	25 (7.6)	25 (7.6)	25 (7.6)
10. Open flames and welding	25 (7.6)	25 (7.6)	25 (7.6)
11. Air compressor intakes or inlets to ventilating or air-conditioning equipment	50 (15.2)	50 (15.2)	50 (15.2)
12. Places of public assembly less than 50 people	25 (7.6)	50 (15.2)	50 (15.2)
13 Public sidewalks and parked vehicles	15 (4.6)	15 (4.6)	15 (4.6)
14 Line of adjoining property that can be built upon	5 (1.5)	5 (1.5)	5 (1.5)
15. Flammable/Combustible liquid dispenser	*10 (3.1)*	*10 (3.1)*	*10 (3.1)*
16. Public Way, driveway	*15 (4.6)*	*15 (4.6)*	*15 (4.6)*
17. Railroad	*50 (15.2)*	*50 (15.2)*	*50 (15.2)*

[a] Portions of wall less than 10 ft (3m) (measured horizontally) from any part of a system shall have a fire resistance rating of at least ½ hour.
[b]Exclusive of windows and doors (see number 2 of Table 3-2.2).
[c]Portions of walls less than 10 ft (3m) (measured horizontally) from any part of a system shall have a fire resistance rating of at least 1 hour.
[d]But not less than 1/2 the height of adjacent wall of building or structure.
[e]Distances can be reduced to 15 ft (4.5m) for Class IIIB combustible liquids.

3-2.2.1 Loose or piled combustible material and weeds and long dry grass shall not be within 10 feet (3.1 meters) of any system.
Roof top storage.

Construction of the building/roof that carries the load of the storage tank must carry a minimum 1-hour fire rating.
System must be securely mounted to roof.
System must be located to allow for inspection of the system acceptable to the department based on the best interest of public health, safety, and welfare and the environment.
3-2.3 Unloading connections on delivery equipment shall not be positioned closer to any of the exposures cited in table 3-2.2 than the distances given for the storage system.

(a) H_2 transfer between cargo transport vehicle and stationary container systems (single or multiple containers utilizing a common or manifolded transfer line), shall comply with all of the following:

(i) Owners and operators shall ensure that fixed piping is used between the container and master shutoff and check valves. The piping and manifolds shall be secured to the container frame. Flexible hoses are only permitted between the check valve and the cargo vehicle unloading connection.

(ii) Emergency shutoff valves required in this section shall be tested annually for proper operation. The results of the tests shall be documented.

(iii) All installations shall have at least 1 clearly identified and easily accessible manually operated remote emergency shutoff device. Within 1 year after the effective date of these rules, existing installations shall have at least 1 clearly identified and easily accessible manually operated remote emergency shutoff device. The emergency shutoff device shall be located not less than 20 feet (6.1 meters) nor more than 100 feet (30.5 meters) in the path of egress from the emergency shutoff valve and not less than 20 feet (6.1 meters) from the container system.

(iv) During transfer of H_2 to and from cargo vehicles, the hand or emergency brake of the vehicle shall be set, and chock blocks shall be used to prevent rolling of the vehicle.

(v) Transfer systems shall be capable of depressurizing to facilitate disconnection. Bleed connections shall lead to a safe point of discharge.

(vi) Cargo vehicle shall be equipped with air-brake interlock in front of the unloading connection to protect against drive-away.

(b) The delivery vehicle shall be located so that all parts of the vehicle are on the premises when delivery is made. Check valves shall be located as close to the container as practical.

(i) Sources of ignition shall not be permitted in the unloading area while transfer is in progress.

3-2.4 H_2 systems of less than 3500 scf (99 m3), where located inside buildings and exposed to other occupancies, shall be situated in the building so that the system will be as follows:

(a) In an adequately ventilated area as in 4-2.2.

(b) 20 feet (6.1 meters) from all classes of flammable and combustible liquids, oxidizing gases, and readily combustible materials, such as excelsior and paper.

(c) 25 feet (7.6 meters) from open flames, ordinary electrical equipment, or other sources of ignition .

(d) 50 feet (15.24 meters) from intakes of ventilation or air-conditioning equipment and air compressors.

(e) 50 feet (15.24 meters) from other flammable gas storage.

(f) Protected against damage or injury due to falling objects or working activity in the area. More than one system of 3500 scf (99 cubic meters) or less shall be permitted to be installed in the same room, provided the systems are separated by at least 50 feet (15.24

meters) or where a masonry structure having a minimum fire resistance rating of 2 hours is located between the systems. Each such system shall meet all of the requirements of this section.

Exception: The separation distance between multiple systems of 3500 scf (99 cubic meters) or less shall be permitted to be reduced to 25 feet (7.6 meters) in buildings where the occupancy between storage areas is free of combustible materials and protected with a sprinkler system designed for Ordinary Hazard, Group 1 occupancies or Light Hazard occupancies in accordance with NFPA 13, Standard for the Installation of Sprinkler Systems.

3-2.6 An owner and operator shall ensure that a container system, which is underground, mounded, or partially underground, is protected from corrosion by 1 of the following:

(a) The approved container system is cathodically protected by all the following requirements:

(i) The approved container system is coated with a suitable dielectric material approved by the department.

(ii) Factory-installed or field installed cathodic protection systems are designed by a corrosion expert or in accordance with the NACE recommended practice RP0285 entitled "Corrosion Control of Underground Storage Tank Systems by Cathodic Protection," or impressed current systems are designed to allow a determination of current operating status as required in section 5.4-1 of the H_2 code.

(iii) Cathodic protection systems are operated and maintained in accordance with the provisions of section 5.4-1 of the H_2 code.

(b) The container is made of nonmetallic construction or corrosion-resistant, such as fiberglass or a composite.

(c) Or other means acceptable to the department and based on the best interest of public health, safety, and welfare and the environment.

3-2.7 Out-of-service aboveground containers.

Containers that are no longer in service for a period of 12 months shall be closed. To close the aboveground container, the owner or operator shall empty the container, purge it with an inert gas and safeguard it against tampering. Piping that is removed from service shall be purged with nitrogen and capped or removed.

3-2.7.2 Each container that is to be reused at the original location or a new location shall be purged with an inert gas and be in compliance with all the requirements for the installation of a new container, and shall be recertified by the manufacturer or authorized representative, and tested in accordance with the container's design specifications or be pressure tested with an inert gas or H_2 at 1.1 times the MAWP for not less than 10 minutes. Piping that is to be reused shall comply with all the requirements for the installation of new piping and shall be tested in compliance with section

3-2.9 of this code prior to being brought back into service.

3-2.8 Out-of-service underground, mounded, and partially buried containers.

3-2.8.1 Containers that are no longer used to store H_2 and are not intended to be brought back into service shall be permanently closed. To permanently close the container, the container shall be emptied and purged with an inert gas to render the container free of H_2, and then the container shall be removed from the ground. When a structure above or near the container prevents removal, the container shall be emptied and purged with an inert gas to render the container free of H_2, then the container shall be filled with an inert solid

material. Piping that is permanently removed from service shall be purged with an inert gas and capped or removed.
3-2.8.2 Containers may be rendered temporarily out-of-service only when it is intended they be brought back into service at a later date. To temporarily close a container, all of the following requirements shall be met:
(a) The container shall be emptied and purged with an inert gas.
(b) Corrosion protection for the container and all underground piping shall be maintained in compliance with section 5-4.1 of this code.
(c) The vent line shall remain functional.
(d) The container shall be secured against tampering.
(e) Piping that is temporarily removed from service shall be purged with an inert gas and capped.
3-2.8.2.1 Each container that is temporarily out of service for greater than 12 months shall be pressure tested with an inert gas at 1.1 times the MAWP for not less than 10 minutes prior to being brought into service. Temporarily out of service piping shall be tested in compliance with section 3-2.9 of this code prior to being brought back into service.
3-2.9 Testing. After installation, prior to being placed into service, all container connections and all fielderected piping, tubing, hose, and hose assemblies shall be tested and proved H_2 gas-tight for the rated pressure, volume, and temperature of the gas transported by an approved method as outlined in ASME B31.3, "Process Piping," adopted by reference in section 8-1, or the following:
(a) Perform a pressure test at 1.1 times MAWP, a minimum of 10 minutes.
(b) During pressure test, check for pressure decay. If leakage is detected, use leak detection fluid to find local leaks. Energize the piping with H_2 at the MOP, and check for local leaks with a "sonic tester," "sniffer," or method acceptable to the department based on the best interests of public health, safety, welfare and the environment. If the test "fails" the requirements in subsections (a), (b), or (c) of this section, the system must be purged with an inert gas, repaired, and subsections (a), (b), and (c) of this section shall be repeated until the test "passes."

History: 2008 AACS.

R 29.7035 Vaults for aboveground containers.

Rule 35. Sections 3-3 to 3-3.2 of the storage and handling of gaseous and Liquefied H_2 code are added as follows:
3-3 Vaults for aboveground containers. Vaults may be installed aboveground, underground or partially buried.
3-3.1 General. Aboveground containers may be installed in vaults that meet the requirements of section 3-3. Except as modified by the provisions of section 3-3, vaults shall meet all other applicable provisions of these rules.
3-3.2 Vault design and construction. Vaults shall be designed and constructed to meet the following requirements:
(a) The walls and floor of the vault shall be constructed of reinforced concrete at least 6 inches (15.24 centimeters) thick.
(b) The top of an aboveground vault shall be constructed of noncombustible material and shall be designed to be weaker than the walls of the vault to ensure that, in the event of any

explosion, the thrust occurring inside the vault is directed upward before destructive internal pressure develops within the vault. The top of an at-grade or below-grade vault shall be designed to relieve or contain the force of any explosion occurring inside the vault. The walls of a vault, which are partially below-grade, shall extend not less than 4 feet (1.2 meters) above grade.

(c) The top and floor of a below-grade vault and the container foundation shall be designed to withstand all anticipated loading from vehicular traffic, where applicable.

(d) The walls and floor of a below-grade vault shall be designed to withstand anticipated soil and hydrostatic loading. The vault shall be liquid tight.

(e) Adjacent vault may share a common wall.

(f) The vault enclosure shall not have openings except those necessary for access to, inspection of, and filling, emptying, and venting of the container.

(g) When required, the vault shall be designed to be wind and earthquake resistant, in accordance with good engineering practice.

(h) The vault shall be provided with an open and continuous vent to provide ventilation to dilute, disperse, and remove any vapors. This continuous vent line shall terminate 12 feet (3.7 meters) abovegrade.

(i) Each vault shall be provided with a means for personal entry, which shall only be at the top of the vault to allow for the visual inspection of the container and piping surfaces. At each entry point, a warning sign that indicates the need for procedures for safe entry into a confined space shall be posted. Each entry point shall be secured against unauthorized entry and vandalism.

(j) The vault shall be provided with an approved means to admit a fire suppression agent.

(k) The loading and unloading transfer connection for abovegrade vaults shall terminate outside the vault.

(l) Provisions shall be made for the normal operation of valves without entering the vault.

(m) A vault shall be located not less than 15 feet (4.6 meters) from buildings and property lines.

(n) Container selection and arrangement. Containers shall be listed for aboveground use. Each container or manifolded system, shall be in its own vault and shall be completely enclosed by the vault, and securely fastened to the floor of the vault. Sufficient clearance between the container and the vault shall be provided to allow for visual inspection and maintenance of all the vault surfaces as well as the tank and its appurtenances.

(o) The vault shall be provided with a continuous H_2 gas leak detection device with an audible alarm set at 25% of the LEL and will render the system inoperable. The H_2 leak detection device shall function during system maintenance operations.

History: 2008 AACS.

R 29.7036 Location of dispensing operations and equipment.

Rule 36. Sections 3-4 to 3-4.5 of the storage and handling of gaseous and Liquefied H_2 code are added as follows:

3-4 Location of dispensing operations and equipment.

3-4.1 Dispensing equipment located outdoors shall be in accordance with the following:

(a) Dispensing equipment shall be allowed under weather protection in accordance with the requirements of section 4-5 and constructed in a manner that prevents the accumulation of H_2 gas.

3-4.2 Gaseous H_2 compression and storage equipment located on top of motor fuel-dispensing facility canopies shall be in accordance with the following:

(a) Canopies shall be constructed in accordance with the requirements for weather protection found in section 2209.3.2.6 of the International Fire Code.

(b) Fuel-dispensing areas under canopies shall be equipped throughout with an approved automatic sprinkler system. Operation of the fire sprinkler system shall activate the emergency functions of the following:

(i) Operation of the fire sprinkler system shall activate an automatic emergency discharge system, which will discharge the H_2 gas from the equipment on the canopy top through the vent pipe system.

(ii) Operation of the fire sprinkler system shall activate the emergency shutdown control in section 7-6.

(iii) Approved signage having a minimum of 3-inch (7.62 centimeters) block letters shall be affixed on all sides on the exterior of the canopy structure stating either CANOPY TOP HYDROGEN STORAGE or using NFPA 704, "Standard System for the Identification of Fire Hazards of Materials," 1996 edition, adopted by reference in section 8-1.1.

(iv) System must be in compliance with section 3-2.2.2.

3-4.3 Dispensing equipment located outdoors shall be aboveground, shall not be beneath electric power lines or where exposed by their failure, and shall be a minimum of 10 feet (3.1 meters) from the nearest important building or property line or 20 feet (6.1 meters) from any activity that involves a fixed source of ignition.

3-4.4 Dispensing equipment shall be located so that all parts of the vehicle being served are on the premises of the motor fuel dispensing facility.

3-4.5 Dispensing equipment shall be protected against collision damage by means acceptable to the department. Dispensing equipment shall be securely bolted in place. Dispensing equipment shall be installed in accordance with manufacturer's instructions.

History: 2008 AACS.

R 29.7037 Installation of emergency shutdown equipment.

Rule 37. Sections 3-5 to 3-5.2 of the storage and handling of gaseous and Liquefied H_2 code are added as follows:

3-5 Installation of emergency shutdown equipment.

3-5.1 Breakaway protection shall be provided in a manner such that, if a pull away event occurs, H_2 gas will cease to flow at any separation.

3-5.2 A breakaway device shall be installed at every dispensing point. Such a device shall be arranged to separate by a force not greater than 150 pounds (75 kilograms), when applied in any direction that the vehicle would move. Breakaway devices shall be compatible with a standard acceptable to the department.

History: 2008 AACS.

Chapter 4 Design considerations at specific locations

R 29.7038 Outdoor locations.

Rule 38. Sections 4-1, 4-1.1, and 4-1.2 were reproduced from NFPA 50A as follows:

4-1 Outdoor Locations.

4-1.1 Where protective walls or roofs are provided, they shall be constructed of noncombustible or limited-combustible materials.

4-1.2 Electrical equipment within 15 feet (4.6 m) shall be in accordance with Article 501 of NFPA 70, National Electrical Code®, for Class I, Division 2 locations.

History: 2008 AACS.

R 29.7039 Separate buildings.

Rule 39. Sections 4-2.1, 4-2.4 to 4-2.6 are reproduced from NFPA 50A, and sections 4-2.2, and 4-2.3 of the storage and handling of gaseous and Liquefied H_2 code are added as follows:

4-2 Separate buildings.

4-2.1 Separate buildings shall be constructed of noncombustible or limited-combustible materials. Windows and doors shall be located so as to be readily accessible in case of emergency.

Exception: Window glazing shall be permitted to be plastic.

4-2.2 Ventilation to the outdoors shall be provided. Inlet openings shall be located within 18 inches (30 centimeters) of the floor in exterior walls only. Outlet openings shall be located at the high point of the room in exterior walls or roof. Inlet and outlet openings shall each have a minimum total area of 1 square foot/1,000 cubic feet (1 square meters/305 cubic meters) of room volume. Discharge from outlet openings shall be directed or conducted to the atmosphere.

4-2.3 Deflagration venting shall be provided in exterior walls or roof only.

4-2.3.1 Vents shall be any 1 or any combination of the following:

(a) Walls of light material.

(b) Lightly fastened hatch covers.

(c) Lightly fastened, outward opening doors in exterior walls.

(d) Lightly fastened walls or roof.

(e) Other methods in accordance with NFPA 69.

4-2.3.2 Where applicable, snow loads shall be considered.

4-2.4 There shall be no sources of ignition from open flames, electrical equipment, or heating equipment.

4-2.5 Electrical equipment shall be in accordance with Article 501 of NFPA 70, National Electrical Code, for Class I, Division 2 locations.

4-2.6 Heating, if provided, shall be by steam, hot water, or other indirect means except that electrical heating may be used if in compliance with 4-2.5.

History: 2008 AACS.

R 29.7040 Special rooms.

Rule 40. Sections 4-3.2 to 4-3.6 are reproduced from NFPA 50A, and sections 4-3.1, 4-3.7 to 4-3.9, and table 4-3.9 of the storage and handling of gaseous and Liquefied H_2 code are added as follows:

4-3 Special rooms.

4-3.1 Floor, walls, and ceiling shall be constructed of noncombustible or limited-combustible materials. Interior walls or partitions shall have a fire resistance rating of at least 2 hours, shall be continuous from floor to ceiling, and shall be securely anchored. At least 1 wall shall be an exterior wall. Windows and doors shall be located so as to be readily accessible in case of emergency.

Exception: Window glazing may be of plastic.

4-3.1.1 If access to the room from outside the primary structure is not possible, access from within the primary structure shall be made through 1 vapor-sealing 2-hour self-closing fire door.

4-3.2 Ventilation shall be as provided in section 4-2.2.

4-3.3 Explosion venting shall be as provided in section 4-2.3.

4-3.4 There shall be no sources of ignition from open flames, electrical equipment, or heating equipment.

4-3.5 Electrical equipment shall be in accordance with Article 501 of NFPA 70, National Electrical Code, for Class I, Division 2 locations.

4-3.6 Heating, if provided, shall be by steam, hot water, or indirect means except that electrical heating shall be permitted to be used if in compliance with 4-3.5.

4-3.7 Room ventilation.

4-3.7.1 The ventilation shall be at least 1 cubic feet/minute/square feet (0.3 cubic meters/minute/square meters) of room area, but not less than 1 cubic foot/minute/12 cubic feet (0.3 cubic meters/minute/3.7 cubic meters) of room volume and shall be designed such that an accumulation of H_2 at a concentration equal to or greater than 25% of the lower flammability limit shall not occur in any part of the room.

4-3.7.2 Where installed, a gas detection system shall be equipped to sound an alarm and visually indicate when a maximum of 25% of the lower flammable limit is reached. At 40% of the lower flammable limit the gas detection system shall shut down the hydrogen system and provide notification to the system operator.

4-3.7.3 Any failure of the ventilation system shall immediately shut down the fueling system and provide notification to the system operator. Reactivation of the fueling system shall be by manual restart and shall be conducted by trained personnel.

4-3.7.4 The gas detection system shall function during ventilation system maintenance operations.

4-3.7.5 A ventilation system for a room within or attached to another building shall be designed to ensure that all areas serviced by the ventilation system meet performance requirements in accordance with section 4-3.7 during the normal operating conditions and during alarm conditions.

4-3.8 Warning signs.

4-3.8.1 Access doors shall have warning signs with the words "WARNING - NO SMOKING – NON ODORIZED FLAMMABLE GAS - NO OPEN FLAMES. The wording shall be in plainly legible, bright red letters not less than 1 inch (2.54 centimeters) high on a white background.

4-3.9 Indoor attended fast-fill fueling.

4-3.9.1 Attended indoor fast-fill fueling system shall be in accordance with subsections (a) to (k) of this section.

(a) Gas storage equipment shall be located outdoors unless approved by the department. Gas processing and compression equipment shall be listed or approved for indoor use or located outdoors.

(b) An emergency manual shutdown device shall be located in the dispensing area not less than 20 feet (6.1 meters) and not more than 100 feet (30.5 meters) in the path of egress from the dispensing area. Actuation of the emergency manual shutdown device shall perform in accordance with subsection (h) of this section.

(c) The dispenser shall be equipped with a gas detection system which shall actuate in accordance with subsection (h) of this section when a maximum of 25% of LFL is detected (1% H_2 in air).

(d) The dispenser shall be equipped with a leak detection system capable of identifying a leak from the dispensing system outside the dispenser housing by conducting a pre-fill pressure test. The leak detection must be capable of detecting a minimum leak rate of 1.9 gallons/minute and shall actuate in accordance with subsection (h) of this section when a leak is detected.

(e) Whether the fill is communicated or non-communicated, the dispensing system must be listed, labeled, or approved to insure that the fills are protective of the safety of the temperature, pressure and flow rate of the on-board fuel system during fueling.

(f) The dispensing area shall be equipped with a fire detection system and shall actuate in accordance with subsection (h) of this section if a fire is detected.

(g) A ventilation system shall be installed for the dispensing area. The ventilation system shall be capable of delivering ventilation air as provided in section 4.3.7. The ventilation system shall operate prior to dispenser operation, during fueling, and for at least 1 minute after fueling has been completed. The ventilation flow rate shall be monitored. Failure or reduction of the ventilation flow rate below the required flow rate shall shut down the dispensing system.

Exception: A dispensing area ventilation system is not required when the fuel delivery per refueling event is less than those listed in table 4-3.9.

Table 4-3.9

Room Size (m3)	Maximum fuel delivery per refueling event that does not require room ventilation (kg)
1000	0.8
2000	1.7
3000	2.5
4000	3.3
5000	4.2

(h) The actuation of any 1 of the systems listed in subsections (b) to (g) of this section shall be in accordance with table 4-3.9, and shall shut down the dispenser, stop the flow of gas into the room, and start or continue to run the ventilation system, if required.

1. Reactivation of the dispenser and gas flow into the room shall be by manual restart and shall be conducted by trained personnel.

(i) Interior walls, doors, and window openings within 15 feet (4.6 meters) of the dispenser shall be constructed of materials having a fire rating of at least 2 hours. Wall penetrations shall require use of listed fire rated equipment.

(j) The owner/operator shall not allow hot work/open flames within 15 feet (4.6 meters) of the refueling location unless the dispenser is shut down, depressurized, and purged.

(k) If H_2 is to be removed from the vehicle storage system, H_2 shall be discharged into a closed transfer system or vented outdoors in accordance with CGA G-5.5, "Hydrogen Vent Systems", adopted by reference in section 8-1.

History: 2008 AACS.

R 29.7041 Indoor H_2 storage system location.

Rule 41. Sections 4-4 to 4-4.6, and table 4-4.1of the storage and handling of gaseous and Liquefied H_2 code are added as follows:

4-4 Indoor H_2 storage system location.

4-4.1 H_2 systems of less than 3,500 scf (99 cubic meters) and greater than the maximum allowable quantity found in table 4.4.1, where located inside buildings outside of special rooms, shall be located in the building so that the system will be as follows:

(a) In a ventilated area in accordance with the provisions of section 4-3.7.

(b) Separated from incompatible materials.

(c) 15 feet (4.6 meters) from ordinary electrical equipment, and 25 feet (7.6 meters) from open flames or welding or other sources of ignition.

(d) 50 feet (15.2 meters) from other low-pressure flammable gas storage (less than 500 psig).

(e) Protected against damage in accordance with the provisions of section 2.1.5.

Table 4-4.1 Quantity Thresholds for Gases Requiring Special Provisions

Material	Unsprinklered areas		Sprinklered areas	
	No gas cabinet, gas room, or exhausted enclosure	Gas cabinet, gas room, or exhausted enclosure	No gas cabinet, gas room, or exhausted enclosure	Gas cabinet, gas room, or exhausted enclosure
Cryogenic liquid (flammable or oxidizing)	45 gal	90 gal	90 gal	180 gal
Flammable gas liquefied nonliquefied	14 kg_3 (30 lb) 28 m^3 (1,000 ft^3)	27 kg_3 (60 lb) 28 m^3 (2,000 ft^3)	27 kg_3 (60 lb) 28 m^3 (2,000 ft^3)	55 kg_3 (120 lb) 56 m^3 (4,000 ft^3)

4-4.2 More than 1 system of 3,500 scf (99 cubic meters) or less shall be permitted to be installed in the same room or area outside of special rooms, provided the systems are separated by at least 50 feet (15.2 meters), or by a full height fire-resistive partition having a minimum fire resistance rating of 2 hours is located between the systems.

4-4.3 Each system described in section 4-4.2 shall meet all of the requirements of section 4-4.1.

4-4.4 The separation distance between multiple systems of 3,500 scf (99 cubic meters) or less shall be permitted to be reduced to 25 feet (7.6 meters) in buildings where the space

between storage areas is free of combustible materials and protected with a sprinkler system.
4-4.5 When sprinkler protection is provided, the area in which H_2 is stored or used shall be protected with a sprinkler system designed to be not less than that required by NFPA 13, "Standard for the Installation of Sprinkler Systems," adopted by reference in section 8-1, for ordinary hazard group 2 with a minimum design area of 3,000 square feet (914.4 square meters).
4-4.6 When sprinkler protection is provided, the area in which the H_2 is stored or used shall be protected with a sprinkler system designed to be not less than that required by NFPA 13, "Standard for the Installation of Sprinkler Systems," adopted by reference in section 8-1, for extra hazard group 1 with a minimum design area of 2,500 square feet (762 square meters).

History: 2008 AACS.

R 29.7042 Canopies.

Rule 42. Sections 4-5 to 4-5.2 of the storage and handling of gaseous and Liquefied H_2 code are added as follows:
4-5 Canopies.
4-5.1 A container installation that has a canopy or roof shall have prior approval by the department based on the best interests of public health, safety, and welfare and the environment. This canopy or roof shall not limit the dissipation of heat or dispersion of flammable vapors and cannot restrict firefighting access and control.
4-5.2 A roof or canopy must meet all of the following conditions:
(a) The lowest elevation of the roof or canopy shall not be less than 4 feet (1.8 meters) from the top of the container.
(b) All container vent(s) are extended through the roof or canopy.
(c) The roof or canopy is constructed in such a way that it will not allow vapors to accumulate under the canopy or roof.
(d) Be constructed of noncombustible materials

History: 2008 AACS.

R 29.7043 Fast-fill station.

Rule 43. Sections 4-6 to 4-6.2 of the storage and handling of gaseous and Liquefied H_2 code are added as follows:
4-6 Fast-fill station.
4-6.1 Each line between a gas storage facility and a dispenser at a fast-fill station shall have a valve that closes when 1 of the following occurs:
(a) The power supply to the dispenser is cut off.
(b) Any emergency shutdown device at the refueling station is activated.
4-6.2 A manual shutoff valve shall be provided at a fast-fill station upstream of the breakaway device specified in section 3-5, where it is readily accessible to the person dispensing H_2, unless either of the following occurs:

(a) The self-closing valve referred to in section 4-6.1 is located immediately upstream of the dispenser.

(b) The dispenser is equipped with a self-closing valve that closes each time the dispenser is deactivated or when an emergency device is activated.

History: 2008 AACS.

R 29.7044 Vehicle fueling appliances in nonresidential occupancies.

Rule 44. Sections 4-7 to 4-7.7 of the storage and handling of gaseous and Liquefied H_2 code are added as follows:

4-7 Vehicle fueling appliances (VFA) in nonresidential occupancies.

4-7.1 VFAs shall not exceed a gas flow of 36 scf/minute.

4-7.2 VFAs shall be listed.

4-7.3 VFAs may be used to fill stationary containers at vehicular fueling locations.

4-7.4 A VFAs installed with storage containers shall comply with the provisions of chapters 2, 3, and 4.

4-7.5 The installation of VFAs at a residence shall comply with the requirements of section 4-9.

4-7.6 Where more than 1 VFA are located in a common area, spacing between the VFAs shall not be less than 3 feet (1 meter), unless permitted in the manufacturer's recommendations.

4-7.7 Unless specifically permitted in the manufacture's recommendations, multiple VFAs shall not be manifolded together on the discharge side.

History: 2008 AACS.

R 29.7045 Installation of electrical equipment.

Rule 45. Sections 4-8 to 4-8.2 of the storage and handling of gaseous and Liquefied H_2 code are added as follows:

4-8 Installation of electrical equipment.

4-8.1 Electrical equipment and wiring shall be specified and installed in accordance with NFPA 70, "National Electrical Code," adopted by reference in section 8-1.

4-8.2 Static protection shall be required when gaseous H_2 cargo transport vehicles are loaded or unloaded. This can be achieved when cargo transport vehicles or marine equipment are loaded or unloaded by grounding cable, conductive hose, flexible metallic tubing, or pipe connections where both halves of metallic couplings are in contact.

History: 2008 AACS.

R 29.7046 Residential fueling facility.

Rule 46. Sections 4-9 to 4-9.11 of the storage and handling of gaseous and Liquefied H_2 code are added as follows:

4-9 Residential fueling facility (RFF).

4-9.1 Application. This section applies to the design, construction, installation, and operation of an RFF.
4-9.2 Storage of H_2 in quantities not exceeding 3,500 scf (99 cubic meters) at 12,500 psig shall be permitted in systems listed by a national recognized testing laboratory.
4-9.2.1 The RFF may store H_2 indoors or outdoors. Indoor storage of H_2 shall not exceed 3,500 scf (99 cubic meters) at 7,700 psig provided that indoor storage is ventilated per section 4-3.7, or storage shall be in a separate sealed enclosure ventilated directly to outdoors.
4-9.3 System component qualifications. System components not part of a listed fueling appliance shall comply with the appropriate provisions of chapter 2.
4-9.3.1 Fueling appliances shall be listed.
4-9.4 General safety requirements. All equipment related to RFF installation shall be protected to minimize the possibilities of physical damage and vandalism. The use of an enclosure for the compressor package, similar to that of a central air conditioner, shall be permitted to satisfy this requirement.
4-9.4.1 All equipment related to RFF installation shall be designed for the pressure, temperature, and service expected.
4-9.4.2 Vehicles shall not be considered a source of ignition.
Exception: Vehicles containing fuel-fired equipment, such as recreational vehicles, shall be considered a source of ignition unless this equipment is shutoff completely before entering an area in which ignition sources shall not be permitted.
4-9.4.3 Unless specifically permitted in the manufacturer's recommendations, multiple RFFs shall not be manifolded together on the discharge side.
4-9.4.4 Where more than 1 RFF is located in a common area, spacing between the RFFs shall not be less than 3 feet (1 meter) unless permitted by the manufacturer's recommendations.
4-9.5 Installation.
4-9.5.1 General. All RFF equipment shall include manufacturer's recommendations and such recommendations shall include, but may not be limited to, the requirements for the proper installation, operation, and maintenance of the RFF. The RFF shall be installed, operated, and maintained in accordance with the manufacturer's recommendations.
4-9.5.1.1 The RFF shall have a nameplate marked with minimum and maximum gas inlet pressure and flow rate, gas outlet maximum pressure, and electrical requirements.
4-9.5.2 Indoors. Where it is necessary to install the compression unit and refueling connections indoors, the compression unit shall be mounted or otherwise located such that the compression unit is vented outdoors.
4-9.5.2.1 Where the RFF or the vehicle being fueled is located indoors, a gas detector set to operate at 1/5 25% the lower limit of flammability of H_2 shall be installed in the room.
4-9.5.2.2 The detector shall be located within 6 inches (15.2 centimeters) of the ceiling or the highest point in the room.
4-9.5.2.3 The detector shall stop the flow of H_2 and operate an audible or a visual alarm.
4-9.6 Installation of pressure relief valves shall have pressure relief device vents or vent lines to convey escaping gas to the outdoors and then upward to a safe area to prevent impinging on buildings, other equipment, or areas open to the public, such as sidewalks.

4-9.7 Piping and hose. A fueling hose shall be limited to a maximum length of 25 feet (7.62 meters) and shall be protected from mechanical damage from abrasion and from being driven over by a vehicle.
4-9.7.1 Transfer systems shall be capable of depressurizing the nozzle to facilitate disconnection. Bleed connections shall lead to a safe point of discharge.
4-9.8 Testing. All piping and tubing shall be tested after assembly according to section 2-6.
4-9.9 Installation of emergency shutdown equipment. An RFF shall be equipped with emergency manual shut down of the fuel supply prior to the RFF device. The emergency manual shutdown actuator shall be at least 5 feet (1.52 meters) from the RFF and in view of the RFF.
4-9.9.1 Breakaway protection shall be provided in a manner so that, in the event of a pull away, H_2 ceases to flow.
4-9.9.1.1 The breakaway devices shall comply with ANSI/CSA HGV 4.4, "breakaway devices for dispensing systems," adopted by reference in section 8-1.
4-9.9.1.2 A breakaway device shall be installed at every dispensing point.
4-9.9.1.3 The breakaway device in 4-9.8.2.3 shall be arranged to separate using a force not greater than 150 pounds (75 kilograms) when applied in a horizontal direction.
4-9.10 Operation. An RFF shall be operated in accordance with the manufacturer's instructions.
4-9.10.1 A fuel supply container shall not be charged in excess of its maximum allowable service pressure at normal temperature.
4-9.10.2 U.S. DOT containers shall be charged in accordance with U.S. DOT regulations.
4-9.10.3 Where H_2 is being transferred to a motor vehicle, the engine shall be turned off.
4-9.11 Maintenance and inspection. All RFF equipment shall be inspected and maintained in accordance with the manufacturer's instructions.

History: 2008 AACS.

Chapter 5 Operation and Maintenance

R 29.7047 Operation.

Rule 47. Section 5-1 is reproduced from NFPA 50A, and sections 5-1.1 to 5-1.3 of the storage and handling of gaseous and Liquefied H_2 code are added as follows:
5-1 Operation. For installations that require any operation of equipment by the user, instructions shall be maintained at operating locations.
5-1.1 A vehicle container shall not be charged in excess of the service pressure compensated for the differences in temperature from nominal.
5-1.2 H_2 vehicle containers shall not be subjected to pressure in excess of 125% of the marked service pressure even if, on cooling, the pressure settles to the marked service pressure.
5-1.3 Where an overpressure incident that results in operation of the overpressure protection system of the dispenser occurs, the dispenser pressure control system shall be examined and certified by a qualified operator prior to being returned to service.

History: 2008 AACS.

R 29.7048 Maintenance.

Rule 48. Section 5-2 is reproduced from NFPA 50A, and sections 5-2.1 to 5-2.11 of the storage and handling of gaseous and Liquefied H_2 code are added as follows:

5-2 Maintenance. Each hydrogen system installed on consumer premises shall be inspected annually and maintained by a qualified representative of the equipment owner.

5-2.1 Hoses, nozzles and breakaways shall be examined visually to ensure that they are safe for use and shall be maintained in accordance with manufacturer's instructions on at least a quarterly basis or earlier if required by the manufacturer.

5-2.2 Hose shall be tested for leaks per manufacturer's requirements and any leakage shall be a reason for rejection and replacement.

5-2.3 Testing shall be carried out with helium or with helium/ H_2 blend as the test gas or if this is not possible, with H_2 using suitable precautions.

5-2.4 The facility operator shall maintain a maintenance log in good condition and accessible to department inspection. Records shall be maintained for a minimum of 2 years.

5-2.5 Controllers on fuel stations shall be designed to verify the integrity of the fuel hose, breakaway, nozzle, and receptacle by pressurizing these components to at least the vehicle backpressure and checking pressure drop prior to the start of fueling.

5-2.6 Containers and their appurtenances, piping systems, compression equipment, controls, and detection devices shall be maintained in operating condition and according to manufacturer's instructions.

5-2.7 Pressure relief valves shall be maintained in operating condition.

5-2.8 Maintenance personnel shall be trained in leak detection procedures.

5-2.9 Area within 10 feet (3.1 meters) of dispenser shall be free from debris, weeds and other material that present a fire hazard.

5-2.10 Safety, gas detection, and fire protection equipment shall be tested or inspected at intervals not to exceed 6 months.

5-2.11 Maintenance activities on fire control equipment shall be scheduled so that a minimum of equipment is taken out of service at any 1 time and fire prevention safety is not compromised.

History: 2008 AACS.

R 29.7049 Clearance to combustibles.

Rule 49. Section 5-3 of the storage and handling of gaseous and Liquefied H_2 code is added as follows:

5-3 Clearance to combustibles. The area within 10 feet (3.1 meters) of any H_2 container shall be kept free of dry vegetation and combustible material.

History: 2008 AACS.

R 29.7050 Cathodic protection maintenance.

Rule 50. Sections 5-4 and 5-4.1 of the storage and handling of gaseous and Liquefied H_2 code are added as follows:

5-4 Cathodic protection maintenance.

5-4.1(a) Owners and operators shall ensure that all metallic container systems that are underground, mounded, or partially underground are protected and maintained to minimize corrosion as cited in the NACE standard RP0169 entitled "Recommended Practice, Control of External Corrosion of Underground or Submerged Metallic Piping Systems" and NACE recommended practice RP0285 entitled "Corrosion Control of Underground Storage Tank Systems by Cathodic Protection."

(b) All corrosion protection systems shall be operated and maintained to continuously provide corrosion protection to the metal components of the portion of the ASME approved container system that routinely contains H_2 gas and that is in contact with the ground.

(c) All container systems equipped with cathodic protection systems shall be inspected for proper operation by a NACE certified cathodic protection tester as defined in section 1-5. The H_2 system shall be tested within 6 months of installation and at least once each calendar year at intervals not to exceed 15 months.

(d) Container systems equipped with impressed current cathodic protection systems shall be inspected by the owner every 60 days to ensure that the equipment is operating within design specifications. The design limits shall be readily available.

(e) If container systems are equipped with cathodic protection, then the owner or operator shall maintain records to demonstrate that the cathodic protection is in compliance with the performance standards of this section. The records shall provide both of the following:

(1) The results of the last 3 inspections required in subsection (d) of this section.

The results of testing from the last 2 inspections required in subsection (c) of this section.

(f) Within 6 months following the repair of any cathodically protected container system, where the repairs may affect the operation of the cathodic protection system, the system shall be tested in accordance with subsections (c) and (d) of this section to ensure that it is operating properly.

(g) Repairs or replacement of a cathodic protection system shall be conducted by a NACE certified corrosion expert as defined in section 1-5. General system maintenance of the cathodic protection system including, but not limited to, replacement of fuses, and splicing of cable would not be required to be designed by a corrosion expert and shall be approved by the department to not increase the hazard to public health, safety, and welfare and the environment.

History: 2008 AACS.

R 29.7051 Stray or impressed currents and bonding.

Rule 51. Sections 5-5 to 5-5.3 of the storage and handling of gaseous and Liquefied H_2 code are added as follows:

5-5 Stray or impressed currents and bonding.

5-5.1 Where stray or impressed currents are used or can be present on dispensing systems, such as cathodic protection, protective measures to prevent ignition shall be taken.

5-5.2 Static protection between the fuel dispenser and the vehicle shall not be required where H_2 is transferred by conductive hose, flexible metallic tubing, or pipe connections where both halves of the metallic couplings are in continuous contact.

5-5.3 The transfer surface shall be concrete or shall have a resistivity not exceeding API-RP 2003, "protection against ignitions arising out of static, lightning, and stray currents," adopted by reference in section 8-1, performance criteria of 1 megohm as measured using a method acceptable to the department, such as EN 1081 1998 "Resilient Floor Coverings - Determination of the Electrical Resistance.", adopted by reference in section 8-1.

History: 2008 AACS.

R 29.7052 Emergency plan.

Rule 52. Sections 5-6 to 5-6.2 of the storage and handling of gaseous and Liquefied H_2 code are added as follows:

5-6 Emergency plan.

5-6.1 An emergency plan shall be prepared and updated wherever gaseous or liquefied H_2 are produced, handled, stored, or used.

5-6.2 The plan shall be available to the department for inspection upon reasonable notice and shall include the following information:

(a) The type of emergency equipment available and its location.

(b) A brief description of any testing or maintenance programs for the available emergency equipment.

(c) An indication that hazard identification labeling is provided for each storage area.

(d) Location of posted emergency procedures.

(e) A material safety data sheet (MSDS or equivalent) that is available for the gaseous or liquefied H_2 stored or used on the site.

(f) A list of personnel or site operating authority who are designated and trained to be liaison personnel for the fire department and who are responsible for, but shall not be limited to, the following:

(1) Aiding the emergency responders in pre-emergency planning.

(2) Identifying the location of the gaseous and liquefied H_2 stored or used.

(3) Accessing material safety data sheets.

(4) Knowledge of the site emergency procedures.

(g) A list of types and quantities of gaseous and liquefied H_2 found within the facility.

History: 2008 AACS.

R 29.7053 Release of H_2.

Rule 53. Sections 5-7 to 5-7.2 of the storage and handling of gaseous and Liquefied H_2 code are added as follows:

5-7 Release of H_2.

5-7.1 Records of unexpected discharges. Accurate records of the unexpected discharge of gaseous or liquefied H_2 shall be kept by the facility and made readily available upon request. The records shall be kept for a minimum of 2 years.

5-7.2 Container or PRD failure. When an unexpected discharge due to container or PRD failure is discovered the department and the local fire department shall be immediately notified, and the container shall be repaired or be removed from service.

History: 2008 AACS.

R 29.7054 Security.

Rule 54. Sections 5-8 and 5-8.1 of the storage and handling of gaseous and Liquefied H_2 code are added as follows:

5-8 Security.

5-8.1 Compressed gas cylinders, containers, and systems shall be secured against accidental dislodgement and against access by unauthorized personnel.

History: 2008 AACS.

R 29.7055 Leaks, damage, or corrosion.

Rule 55. Sections 5-9 and 5-9.1 of the storage and handling of gaseous and Liquefied H_2 code are added as follows:

5-9 Leaks, damage, or corrosion.

5-9.1 Leaking, damaged, or corroded gaseous H_2 systems shall be removed from service, replaced, or repaired.

History: 2008 AACS.

Chapter 6 Fire Protection

R 29.7056 Fire protection; caution.

Rule 56. Section 6-1 is reproduced from NFPA 50A as follows:

6-1 Caution. Personnel shall be cautioned that hydrogen flames are practically invisible.

History: 2008 AACS.

R 29.7057 Signage.

Rule 57. Sections 6-2 to 6-2.2 of the storage and handling of gaseous and Liquefied H_2 code are added as follows:

6-2 Hazard identification signs shall be conspicuously placed at all locations where H_2 gas is produced, stored, used, or handled.

6-2.1 Ratings shall be assigned in accordance with NFPA 704, standard system for the identification of the hazards of materials for emergency response.

6-2.2 The hazard classification of the metal hydride storage system shall be based on the H_2 stored without regard to the metal hydride content.

History: 2008 AACS.

R 29.7058 Identification signs.

Rule 58. Sections 6-3 to 6-3.2 of the storage and handling of gaseous and Liquefied H_2 code are added as follows:
6-3 Signs prohibiting smoking or open flames within 25 feet (7.6 meters) shall be provided where H_2 gas is produced, stored, or used.
6-3.1 A sign with the following legends printed in red capital letters on a white background shall be conspicuously posted:
"NONODORIZED FLAMMABLE GAS - NO SMOKING - NO OPEN FLAMES" All lettering on signage shall be 3 inches (7.62 centimeters) or more.
Exception: This does not apply to motor vehicle dispensing per sections 7.2.16 and 4-3.8.1.
6-3.2 Identification signs. Visible hazard identification signs shall be provided in accordance with NFPA 704, "Standard System for the Identification of the Hazards of Materials for Emergency Response," adopted by reference in section 8-1, at entrances to buildings or areas in which liquefied H_2 is stored, handled, or used.

History: 2008 AACS.

R 29.7059 Fire protection.

Rule 59. Section 6-4 of the storage and handling of gaseous and Liquefied H_2 code is added as follows:
6-4 A portable fire extinguisher having a rating of not less than 40-B:C, or 2 20-B:C, shall be located within 75 feet (22.9 meters) from the pumps, dispensers, and container fill openings. Fire extinguishers shall be inspected and maintained according to NFPA 10, "standard for portable fire extinguishers," adopted by reference in section 8-1.1.

History: 2008 AACS.

R 29.7060 Sprinkler protection.

Rule 60. Section 6-5 of the storage and handling of gaseous and Liquefied H_2 code is added as follows:
6-5 When sprinkler protection is provided, the area in which H_2 is stored or used shall be protected with an automatic sprinkler system designed to be not less than that required by NFPA 13, "standard for the installation of sprinkler systems," adopted by reference in section 8-1.

History: 2008 AACS.

Chapter 7 Gaseous hydrogen compression, gas processing, storage, and dispensing systems

R 29.7061 System component qualifications.

Rule 61. Section 7-1 of the storage and handling of gaseous and Liquefied H_2 code is added as follows:

7-1 System component qualifications. System components shall comply with the appropriate provisions of chapters 2 and 3 of this part.

History: 2008 AACS.

R 29.7062 General system requirements.

Rule 62. Sections 7-2 to 7-2.18 of the storage and handling of gaseous and Liquefied H_2 code are added as follows:

7-2 General system requirements.

7-2.1 All fuel dispensing facilities shall meet the provisions of this chapter.

7-2.2 Compression, processing, generation, storage, and dispensing equipment shall be protected to prevent damage from vehicles and minimize the possibilities of physical damage and vandalism and meet the requirements of section 2-1.5 and section 3-4.4.

7-2.2.1 Access to storage, compression, and gas processing equipment by members of the public shall be restricted by a suitable secure area.

7-2.3 Control devices shall be installed so that internal or external icing does not cause vehicle or fueling station malfunction.

7-2.4 Vehicles shall not be considered a source of ignition with respect to the provisions of this chapter.

Exception: Vehicles containing fuel-fired equipment, such as recreational vehicles and catering trucks, shall be considered a source of ignition unless this equipment is shut off completely before entering an area in which ignition sources are not permitted.

7-2.5 The fueling connection shall prevent the escape of gas where the connector is not properly engaged or becomes separated.

7-2.6 Fueling nozzles for H_2 service shall be in accordance with section 2-12.1.

7-2.7 Compression and gas processing equipment shall be designed for use with H_2 and for maximum pressures and temperatures to which it can be subjected under normal operating conditions.

7-2.8 Compression and gas processing equipment shall have pressure relief devices that limit each stage pressure to the maximum allowable working pressure for the compression cylinder and piping associated with that stage of compression and meets the requirements of chapter 2.

7-2.9 H_2 compression equipment shall be equipped with appropriate automatic shutdown controls.

7-2.10 Control circuits that shut down shall remain down until manually activated or reset by qualified personnel.

7-2.11 Engine-driven compressor installations shall conform where applicable to R 29.5101 et seq.

7-2.12 Gas processing equipment, including compression and generation equipment, in processes where liquid is present, shall incorporate means to minimize liquid carryover to the storage system.

7-2.13 A hazard analysis shall be conducted on every H_2 fueling system installation by a qualified engineer with proven expertise in H_2 fueling systems and installations.

Exception: This does not apply to section 4-9.

7-2.13.1 The hazard analysis shall include the following: fire protection measures, fire protection and suppression systems, detection systems, and ventilation.

7-2.13.2 At a minimum, the hazard analysis shall include consideration of potential failures in hoses, nozzles, dispensing equipment, as well as failures for maintenance and service.
7-2.13.3 Method used for hazard analysis shall be 1 or combination of several of the following recognized procedures: hazard and operability studies (HAZOPs), failure mode effects and criticality analysis (FMECA), preliminary hazards analysis (PHA), fault tree analysis (FTA) and event tree analysis (ETA). Other analysis methods, when used, shall ensure same level of system safety as provided by any of the recognized procedures and be acceptable to the department based on the best interest of the public health, safety, and welfare and the environment.
7-2.13.4 Standard designs that have been analyzed by recognized procedures need not be studied each and every time such installation occurs. Site-specific elements that are unique to the installation shall be reviewed in concert with the analysis performed on the standard system to ensure that the standard design has not been altered in a way that would negatively affect the hazard analysis.
7-2.13.5 These hazard analyses shall be available for review at final inspection, prior to the installation being placed into service, shall be maintained on site, and be available to the department upon request.
7-2.14 Dispensing systems shall be equipped to stop fuel flow automatically when a fuel supply container reaches the temperature-corrected fill pressure.
7-2.15 Dispensing systems shall be equipped with an overpressure protection device set at 140 percent of the service pressure of the fueling nozzle it supplies.
7-2.16 Warning signs shall be conspicuously posted in the dispensing area and shall incorporate the following or equivalent wording: "Stop Motor, No Smoking, Non-Odorized Flammable Gas. No Filling Of Portable Containers In Or On A Motor Vehicle."
7-2.17 Each H_2 -dispensing device shall be located not less than 10 feet (3.1 meters) from property lines, openings to buildings, and buildings of combustible wall construction. A dispensing device shall not be less than 20 feet (6.1 meters) from any activity that involves a fixed source of ignition. In addition, a dispenser shall not be placed beneath a power line.
7-2.18 Each container filling location that is open to the public shall have an attendant or supervisor on duty who meets the requirements of section 1-10.1 of the rules.

History: 2008 AACS.

R 29.7063 Operating requirements for full-service H_2 motor fuel dispensing facilities.

Rule 63. Sections 7-3 to 7-3.2 of the storage and handling of gaseous and Liquefied H_2 code are added as follows:
7-3 Operating requirements for full-service H_2 motor fuel dispensing facilities.
7-3.1 Each motor fuel dispensing facility shall have an attendant or supervisor on duty whenever the facility is open for business. The attendant or supervisor shall dispense H_2 into fuel tanks of motor vehicles or into portable containers.
7-3.2 The provisions of section 2-1 of this part shall not prohibit the temporary use of a portable storage container in conjunction with the dispensing of H_2 into a container or motor vehicle or motorized equipment which is on the premises and which is not accessible to the public. A portable storage container installation shall only be made with the approval of the department and comply with all the requirements of section 2-13.

History: 2008 AACS.

R 29.7064 Operating requirements for attended self-service motor fuel dispensing facilities.

Rule 64. Sections 7-4 to 7-4.5 of the storage and handling of gaseous and Liquefied H_2 code are added as follows:

7-4 Operating requirements for attended self-service motor fuel dispensing facilities.

7-4.1 Self-service motor fuel dispensing facility means that portion of a property where H_2 used as motor fuel is stored and dispensed from fixed, approved dispensing equipment into the fuel containers of motor vehicles by persons other than the facility attendant and shall also include, where provided, facilities for sale of other retail products.

7-4.2 There shall be at least 1 attendant on duty while the self-service facility is open for business. The attendant's primary function shall be to supervise, observe, and control the dispensing of H_2 while the H_2 is actually being dispensed.

7-4.3 The responsibility of the attendant shall be as follows:

(a) Prevent the dispensing of H_2 into portable containers in or on a motor vehicle.

(b) Control sources of ignition.

(c) Immediately activate emergency controls and notify the fire department of any fire.

The attendant or supervisor on duty shall be mentally and physically capable of performing the functions and assuming the responsibility prescribed in section 7-4.3.

7-4.4 Operating instructions shall be conspicuously posted in the dispensing area.

7-4.5 The dispensing area shall at all times be in clear view of the attendant, and the placing or allowing of any obstacle to come between the dispensing area and the attendant control area is prohibited. This may be achieved by cameras, mirrors, or both. The attendant shall at all times be able to communicate with persons in the dispensing area.

History: 2008 AACS.

R 29.7065 Operating requirements for unattended self-service motor fuel dispensing facilities.

Rule 65. Sections 7-5 to 7-5.5 of the storage and handling of gaseous and Liquefied H_2 code are added as follows:

7-5 Operating requirements for unattended self-service motor fuel dispensing facilities.

7-5.1 Unattended self-service shall be permitted subject to the approval of the department based on the best interests of public health, safety, and welfare and the environment. Users shall use a key, card, or other method which is unique to each user, and which is provided by the facility operator, and shall be properly trained in dispensing operations. The owner shall verify such training to the department upon request.

7-5.2 At least 1 emergency shutoff device specified in section 7-6 shall be provided, and shall be reset only by the owner or an owner's authorized agent.

7-5.3 Operating instructions shall be conspicuously posted in the dispensing area. The instructions shall include the location of emergency controls.

7-5.4 In addition to the warning signs specified in section 6-3, emergency instructions shall be conspicuously posted in the dispenser area. The instructions shall incorporate the following or equivalent wording:"Emergency instructions In case of fire:

(1) Use emergency stop button.
(2) Report accident by calling the local fire number. Report location."
7-5.5 A telephone or other approved, clearly identified means to notify the fire department shall be provided on the site in a location approved by the department.

History: 2008 AACS.

R 29.7066 Emergency shutoff devices.

Rule 66. Sections 7-6 to 7-6.1 of the storage and handling of gaseous and Liquefied H_2 code are added as follows:
7-6 Emergency shutoff devices.
7-6.1 H_2 dispensing systems shall be provided with 1 or more clearly identified emergency shutoff devices or electrical disconnects at the dispensing area. Such devices or disconnects shall be installed in approved locations but not less than 10 feet (3.1 meters) and not more than 100 feet (30.5 meters) away from the dispensing area and which is along the means of egress. Emergency shutoff devices or electrical disconnects shall disconnect power and gas supply to all dispensing devices, to all remote pumps serving
the dispensing devices, and to all associated power. When more than 1 emergency shutoff device or electrical disconnect is provided, all devices shall be interconnected. Resetting from an emergency shutoff shall require manual intervention and the manner of resetting shall be approved by the department.

History: 2008 AACS.

R 29.7067 Refueling from transport vehicles.

Rule 67. Sections 7-7 to 7-7.11 of the storage and handling of gaseous and Liquefied H_2 code are added as follows:
7-7 Refueling from transport vehicles. The dispensing of H_2 in the open from a transport vehicle to a motor vehicle located at commercial, industrial, governmental, or manufacturing establishments and intended for fueling vehicles used in connection with their businesses shall be permitted if all of the requirements of sections 7-7.1 to 7-7.11 have been met.
7-7.1 The department shall be notified before commencing operations under section 7-7.
7-7.2 The transport vehicle shall comply with U.S. DOT requirements for the transportation of H_2.
7-7.3 Nighttime deliveries shall only be made in an area considered to be adequately lighted.
7-7.4 The transport vehicle flasher lights shall be in operation while dispensing operations are in progress.
7-7.5 Smoking materials, including matches, lighters, and other sources of ignition, including torches, shall not be used within 20 feet (6.1 meters) of the dispensing of H_2 in the open from a transport vehicle to a motor vehicle.
7-7.6 Each area where dispensing of H_2 in the open from a transport vehicle to a motor vehicle shall be provided with 1 or more listed fire extinguishers that have a minimum capability of 40-B:C. The fire extinguishers shall be readily accessible to the dispensing

operation. Fire extinguishers shall be inspected and maintained under NFPA 10, "Standard for Portable Fire Extinguishers," adopted by reference in section 8-1.
7-7.7 Mobile fueling shall take place aboveground, shall not be beneath electric power lines or where exposed by their failure, and shall be a minimum of 10 feet (3.1 meters) from the nearest important building, property line, or combustible storage.
7-7.8 Transport vehicle brakes shall be set and chock blocks shall be in place.
7-7.9 Persons performing dispensing operations shall be qualified to deliver and dispense H_2 fuels. Operations of transport vehicles used for mobile fueling operations shall have access on-site or be in possession of an emergency communications device to notify the proper authorities if there is an emergency.
7-7.10 The transport vehicles shall be positioned with respect to vehicles being fueled to prevent traffic from driving over the delivery hose and between the transport vehicle and motor vehicle being fueled. The dispensing hose shall be properly placed on an approved reel or in an approved compartment before moving the transport vehicle.
7-7.11 Additional requirements. The transfer area must meet the requirements of section 5-5.

History: 2008 AACS.

Chapter 8 Referenced publications

R 29.7068 Referenced publications.

Rule 68. Sections 8-1 to 8-1.2.10 of the storage and handling of gaseous and Liquefied H_2 code are added as follows:
8-1 The following documents or portions thereof are referenced within this standard as mandatory requirements and shall be considered part of the requirements of this standard. The edition indicated for each referenced mandatory document is the current edition, and cost as of the date of issuance of these rules. Copies of the adopted publications are available for inspection at the office of the Department of Environmental Quality, Waste and Hazardous Materials Division, Storage Tank Unit, P.O. Box 30241, Lansing, Michigan 48909-7741.
8-1.1 NFPA publications. National Fire Protection Association. 1 Batterymarch Park, P.O. Box 9101, Quincy, Massachusetts 02269-9101.
NFPA 10, "Standard for Portable Fire Extinguishers," 2002 edition, $36.50.
NFPA 13, "Standard for the Installation of Sprinkler Systems," 2002 edition, $70.00.
NFPA 51, "Standard for the Design and Installation of Oxygen-Fuel Gas Systems for Welding, Cutting, and Allied Processes," 2002 edition, $28.00.
NFPA 52, "Vehicle Fuel Systems Code," 2006 edition, $36.00.
NFPA 55, "Standard for the Storage, Use, and Handling of Compressed Gases and Cryogenic Fluids in Portable and Stationary Containers, Cylinders, and Tanks," 2005 edition, $36.50.
NFPA 69, "Standard on Explosion Prevention Systems," 2002 edition, $33.50.
NFPA 70, "National Electrical Code," 2005 edition, $75.00.
NFPA 101, "Life Safety Code," 2006 edition, $75.00.
NFPA 220, "Standard on Types of Building Construction," 1999 edition, $28.00.

NFPA 496, "Standard for Purged and Pressurized Enclosures for Electrical Equipment," 2003 edition, $33.50.
NFPA 704, "Standard System for the Identification of the Hazards of Materials for Emergency Response," 2001 edition, $33.50.
8-1.2 Other publications.
8-1.2.1 ASME publications. American Society of Mechanical Engineers, Three Park Avenue, New York, New York 10016-5990.
ANSI/ASME B31.3, "Process Piping," 2002 edition, $240.00.
ASME International, "Boiler and Pressure Vessel Code, Section VIII," 2004 edition, $525.00.
8-1.2.2 ASTM publication. American Society for Testing and Materials, 100 Barr Harbor Drive, West Conshohocken, Pennsylvania 19428-2959.
ASTM E136-04, "Standard Test Method for Behavior of Materials in a Vertical Tube Furnace at 750 Degrees C," 2004 edition, $35.00.
8-1.2.3 CGA publications. Compressed Gas Association, 1725 Jefferson Davis Highway, Arlington Virginia 22202-4100.
CGA S-1.1, "Pressure Relief Device Standards - Part 1 - Cylinders for Compressed Gases," 2002 edition, $196.00.
CGA S-1.2, "Pressure Relief Device Standards - Part 2 - Cargo and Portable Tanks for Compressed Gases," 1995 edition, $145.00.
CGA S-1.3, "Pressure Relief Device Standards - Part 3 - Stationary Storage Containers for Compressed Gases," 2003 edition, $145.00.
ANSI/CGA C-4, "Method of Marking Portable Compressed Gas Containers to Identify the Material Contained," 2003 edition, $252.00.
CGA C-7, "Guide to the Preparation of Precautionary Labeling and Marking of Compressed Gas Containers," 2000 edition, $268.00.
CGA G-5.5, "Hydrogen Vent Systems," 2004 edition, $39.00.
8-1.2.4 IAS publications. International Approval Services, 8501 East Pleasant Valley Road, Cleveland, Ohio 44131.
ANSI/IAS NGV 4.4, "Breakaway Devices for Dispensing Systems," 1999 edition, $57.00.
8-1.2.5 NACE publications. National Association of Corrosion Engineers International, 1440 South Creek Drive, Houston, Texas 77084.
NACE RP0169, "Control of External Corrosion of Underground or Submerged Metallic Piping Systems," 2002 edition, $42.00.
NACE RP0285, "Corrosion Control of Underground Storage Tank Systems by Cathodic Protection," 2002 edition, $37.00.
8-1.2.6 SAE publications. Society of Automotive Engineers, 400 Commonwealth Drive, Warrendale, Pennsylvania 15096.
SAE J2600, "Compressed Hydrogen Surface Vehicle Fueling Connection Devices," 2002 edition, $59.00.
8-1.2.7 International codes council. 4051 West Flossmore Road, Country Club Hills, Illinois 60478-5795.
"International Fire Code," 2006 edition, section 2209.3.2.6, $61.50.
8-1.2.8 U.S. Government publications. U.S. Government Printing Office, Washington, DC 20402.

Title 49, Code of Federal Regulations, "Transportation," Parts 171-190, U.S. Department of Transportation "Specifications and Regulations."
8-1.2.9 ECS publications. European Committee for Standardization, Central Secretariat: rue de Stassart 36, B-1050, Brussels.
EN 1081, "Resilient Floor Coverings, Determination of the Electrical Resistance," 1998 edition, $32.00.
8-1.2.10 API publications. American Petroleum Institute, 1220 L Street, Northwest, Washington, DC, 20005-5-4070.
API Recommended Practice 2003, "Protection Against Ignitions Arising Out of Static, Lightning, and Stray Currents," 7th edition, $111.00.

History: 2008 AACS.

PART 3. STORAGE AND HANDLING OF LIQUEFIED HYDROGEN NFPA 50B

Chapter 1 General information

R 29.7070 Scope.

Rule 70. Sections 1-1 to 1-1.3 of the storage and handling of gaseous and Liquefied H_2 code are added as follows:
1-1 Scope.
1-1.1 Application. This standard covers the requirements for the design, siting, construction, installation, spill containment, operation, maintenance, and dispensing from a liquefied H_2 system.
1-1.2 Nothing in this H_2 code shall be intended to prevent the use of systems, methods, or devices of equivalent or superior quality, strength, fire resistance, effectiveness, durability, environmental protection capability, or safety over those prescribed by this H_2 code, if technical documentation is submitted to the department to demonstrate equivalency and the system, method, or device is approved for the intended purpose.
1-1.3 This code shall apply to the design and installation of liquefied H_2 dispensing systems.
Exception: Dispensing into rail and aircraft.

History: 2008 AACS.

R 29.7071 Retroactivity.

Rule 71. Sections 1-2 and 1-2.1of the storage and handling of gaseous and Liquefied H_2 code are added as follows:
1-2 Retroactivity.
1-2.1 The provisions of this H_2 code are necessary to provide a reasonable level of protection from loss of life and property from fire and explosion. The provisions shall reflect situations and the state of the art prevalent when the H_2 code was issued. Unless otherwise noted, it shall not be intended that the provisions of this H_2 code be applied to

facilities, equipment, structures, or installations that were existing or approved for construction or installation before the effective date of this H_2 code, except in those cases where it is determined by the department that the existing situation involves a distinct hazard to public health, safety, and welfare, and the environment.

History: 2008 AACS.

R 29.7072 Definitions.

Rule 72. Section 1-3 of the storage and handling of gaseous and Liquefied H_2 code is added and section 1-3.1 is reproduced from NFPA 50B as follows:

1-3 Definitions.

(a) "ANSI" means the american national standards institute.

(b) "Approved" means acceptable to the department.

(c) "ASME" means the american society of mechanical engineers.

(d) "Authority having jurisdiction" means the department.

(e) "Automatic emergency shutoff valve" means a designated fail-safe automatic closing valve designed to shut off the flow of gases or liquids that is initiated by a control system where the control system is activated by either manual or automatic means.

(f) "Bulk storage" means a single container or containers, where all containers draw down at the same time.

(g) "Cargo transport container" means a mobile unit designed to transport gaseous or liquefied H_2.

(h) "Cascade storage system" means storage in containers or cylinders arranged in banks where each bank acts as 1 large container. The banks are separated by switching valves to provide sequential drawdown of the banks.The bank may consist of 1 or more containers or cylinders.

(i) "Cathodic protection" means a technique to prevent the corrosion of a metal surface by making the surface the cathode of an electrochemical cell.This protection renders a metallic container or piping component negatively charged with respect to its environment. This protection shall be designed by a corrosion expert as defined by these rules.

(j) "Cathodic protection tester" means a person who can demonstrate an understanding of the principles and measurements of all common types of cathodic protection systems applicable to metal piping and container systems and who has education and experience in soil resistivity, stray current, structure-to-soil potential, and component electrical isolation measurements of metal piping and container systems. The person shall be certified as being qualified by the national association of corrosion engineers (NACE) international.

(k) "Composite container" means a container fabricated of 2 or more materials that interact to facilitate the container design criteria.

(l) "Compression discharge pressure" means the varying pressure at the point of discharge from the compressor.

(m) "CGA" means the compressed gas association.

(n) "Container" means a pressure vessel or cylinder used to store H_2.

(o) "Container appurtenances" means devices connected to container openings for safety, control, or operating purposes.

(p) "Container system" means a container or combination of containers and all attached appurtenances, valves, and piping.

(q) "Container valve" means a valve connected directly to the container outlet.

(r) "Continuous gas detection system" means a gas detection system in which the instrument is maintained in continuous operation.

(s) "Corrosion expert" means a person who, by reason of thorough knowledge of the physical sciences and the principals of engineering and mathematics acquired by a professional education and related practical experience, is qualified to engage in the practice of corrosion control of container systems. The person shall be certificated as being qualified by NACE, as a senior corrosion technologist, a cathodic protection specialist, or a corrosion specialist or be a registered engineer who has certification and licensing that includes education and experience in corrosion control.

(t) "Corrosion protection" means protecting a container system to prevent the degradation of the metal through oxidation or reactivity with its environment.

(u) "Cryogenic fluid" means a fluid with a boiling point lower than -130 degrees Fahrenheit (-90 degrees Celsius) at an absolute pressure of 101.325 kPa (14.7 psia).

(v) "Cylinder" means a container constructed in accordance with the United States Department of Transportation specifications, Title 49, code of federal regulations (CFR), parts 171-190.

(w) "Department" means the department of environmental quality.

(x) "Director" means the director of the department of environmental quality.

(y) "Dispensing station" means an H_2 installation that dispenses H_2 from storage containers into fuel supply containers or into portable cylinders by means of a compressor, reformer, vaporizer, or pressure booster.

(z) "Emergency shutdown device (ESD)" means a device that closes all fueling operations within the fueling facility from either local or remote locations.

(aa) "Excess flow control" means to limit or stop the flow of H_2 gas from a source of supply, when there is a rupture, break, or 'open valve to atmosphere' condition that may present a hazard to personnel or the environment.

(bb) "Fail-safe" means a design feature that provides for the maintenance of safe operating conditions in the event of a malfunction of control devices or an interruption of an energy source.

(cc) "Fixed liquid level device" means a device that indicates when the container is filled to its maximum permitted liquid filling volume.

(dd) "Flow-through process container" means a container that forms an integral part of a production process through which there is a steady, variable, recurring, or intermittent flow of materials during the operation of the process and the container is utilized to carry out or control the heating, cooling, mixing, blending, separating, metering, or chemical reaction of materials. The processing is done on a regular basis and it is the primary function of the container. A flow-through process container does not include a container that is used for the storage of materials before its introduction into the production process or for the storage of finished products or by-products from the production process or a container that is only used to recirculate materials.

(ee) "Fuel dispenser system" means all the pumps, meters, piping, hose, and controls used for the delivery of fuel.

(ff) "Fueling connector" means a mating device at the refueling station, including shutoff valves that connect the fueling dispenser hose to the vehicle fuel filling system receptacle for the transfer of liquid or vapor.

(gg) "Gallon water capacity (wc)" means the amount of water in gallons at 60 degrees Fahrenheit (15.6 degrees Celsius) required to fill a container.

(hh) "Gas detection system" means a grouping of 1 or more sensors capable of detecting an H_2 leak at specified concentrations and activating alarms and safety systems.

(ii) "Gaseous H_2 system" means a system in which the H_2 is delivered, stored, and discharged in the gaseous form including the piping system. The gaseous H_2 system terminates at the point where the H_2 is dispensed.

(jj) "Hydrogen (H_2)" means the simplest and lightest element in the known universe, which exists as a gas except at low cryogenic temperatures. H_2 gas is a colorless, odorless and highly flammable gas when mixed with oxygen over a wide range of concentrations. H_2 forms water when combusted, or when otherwise joined with oxygen, as within a fuel cell.

(kk) "Hydrogen code" means the storage and handling of gaseous and liquefied H_2 rules as promulgated by the department.

(ll) "Hydrogen gas vehicle (HGV) or vehicle" means a self-propelled device on land; in, on, or by which any person or property is or may be transported or drawn upon, except for a device exclusively moved by human power; and which has the capability to use H_2 gas as an engine fuel.

(mm) "Ignition source" means any item or substance capable of an energy release of type and magnitude sufficient to ignite any flammable mixture of gases or vapors that could occur at the site.

(nn) "kPa" means absolute pressure in kilo-Pascals.

(oo) "kPag" means gauge pressure in kilo-Pascals.

(pp) "Labeled" means equipment or materials to which has been attached a label, symbol, or other identifying mark of an organization that is acceptable to the department and concerned with product evaluation, that maintains periodic inspection of production of labeled equipment or materials, and by whose labeling the manufacturer indicates compliance with accepted or approved standards of construction and or performance.

(qq) "Liquefied hydrogen system" means a system into which liquefied H_2 is delivered and stored and from which it is discharged in the liquid or gaseous form including the piping system. The liquid or gaseous H_2 system terminates at the point where the H_2 is dispensed.

(rr) "Listed" means equipment, materials, or services included in a list published by an organization that is acceptable to the department and concerned with evaluation of products or services, that maintains periodic inspection of production listed equipment or materials or periodic evaluation of services, and whose listing states that either the equipment, material, or service meets appropriate designated standards or has been tested and found suitable for a specified purpose.

(ss) "Manifolded storage system" means storage in containers arranged in banks where each bank acts as 1 large container. The banks are separated by switching valves to provide sequential drawdown of the banks. The bank may consist of 1 or more containers.

(tt) "Manual emergency shutoff valve" means a designated valve designed to shut off flow due to arupture in pressurized piping system.

(uu) "Maximum allowable working pressure (MAWP)" means the maximum pressure to which any component or portion of the pressure system can be subjected.

(vv) "Maximum operating pressure (MOP)" means the steady-state gauge pressure at which a part or system normally operates.

(ww) "Metal hydride storage system" means a system for the storage of H_2 gas absorbed in solid material.

(xx) "Motor fuel dispensing facility" means that portion of the property where H_2 is stored and dispensed from fixed equipment into the fuel tanks of motor vehicles or marine craft or into approved containers, including all equipment used in connection therewith.

(yy) "NACE" means the national association of corrosion engineers, international.

(zz) "Original equipment manufacturer (OEM)" means an original equipment motor vehicle manufacturer that certifies that the motor vehicle complies with applicable federal motor vehicle safety codes.

(aaa) "Partially buried container" means a container that has part of, but less than 100%, of the container surface covered with earth.

(bbb) "Point of transfer" means the point where the transfer connection is made.

(ccc) "Portable container" means a container designed to be moved readily, as distinguished from containers designed for stationary installations.Portable containers, designed for transportation with H_2 filled to their maximum filling limit, include "cylinders," "cargo tanks," and "portable tanks," all 3 of which are defined separately. Containers designed to be readily moved from 1 usage location to another, but substantially empty of product, are "portable storage containers" and are defined separately.

(ddd) "Portable storage container" means a container similar to those designed and constructed for stationary installation, designed so that it can be moved readily over the highways, substantially empty of liquefied H_2, from 1 usage location to another. Such containers either have legs or other supports attached, or are mounted on running gear, such as trailer or semitrailer chassis, with suitable supports that can be of the fold-down type, allowing them to be placed or parked in a stable position on a reasonably firm and level surface. For large-volume, limited-duration product usage, such as at construction sites and normally for 6 months or less, portable storage containers function in lieu of permanently installed stationary containers.

(eee) "Portable tank, or skid tank" means a container of more than 1,000 pounds (454 kilograms) water capacity used to transport H_2 handled as a package, that is, filled to its maximum permitted filling limit. Such containers are mounted on skids or runners and have all container appurtenances protected in such a manner that they can be safely handled as a package.

(fff) "Pressure relief device" means a pressure or temperature activated device used to prevent pressure from rising above a specified value and thereby prevent the rupture of a normally charged pressure vessel or a cylinder due to emergency or abnormal conditions.

(ggg) "Pressure vessel" means a container or other component designed in accordance with the ASME code.

(hhh) "psi" means pounds per square inch.

(iii) "psia" means pounds per square inch, absolute.

(jjj) "psig" means pounds per square inch gauge.

(kkk) "Rated pressure" means the pressure to which a component is rated provided that the MAWPis observed for temperature extremes.

(lll) "Release" means an unexpected discharge of H_2.

(mmm) "Remotely located manually activated shutdown control" means a control system that is designed to initiate shut down of the flow of gas or liquid that is manually activated from a point located some distance from the delivery system.

(nnn) "Service pressure" means the nominal gas pressure at a uniform gas temperature of 70 degrees Fahrenheit (15.6 degrees Celsius) when the equipment is properly and completely charged with gas; the nominal design pressure for which the equipment has been constructed.

(ooo) "Set pressure" means the start-to-discharge pressure for which a relief valve is set and marked.

(ppp) "Standard cubic foot (scf)" means 1 cubic foot of gas at 70 degrees Fahrenheit (21 degrees Celsius) and 14.7 psia (101 kPa).

(qqq) "Standard cubic foot per minute (scfm)" means the amount of gas flow in standard cubic feet per minute compensated for pressure and temperature.

(rrr) "Substantially empty" means a gas container of H_2 when the residual gas pressure is less than 10% of the maximum allowable working pressure of the vessel. A liquefied H_2 container is substantially empty when the liquid level within the container is less than 10% of its normal operating volume.

(sss) "Vaporizer" means a device other than a container that receives H_2 in liquid form and adds sufficient heat to convert the liquid to a gaseous state.

(ttt) "Vehicle-fueling appliance" means a self-contained listed assembly used for the compression and delivery of H_2 into vehicles including associated equipment and piping of the appliance.

1-3.1 NFPA official definitions.Combustible liquid. A liquid having a closed-cup flash point at or above 100°F (37.8°C) and are subdivided as follows:

(a) Class II liquids include those having a flash point at or above 100°F (37.8°C) and below 140°F (60°C).

(b) Class IIIA liquids include those having a flash point at or above 140°F (60°C) and below 200°F (93.4°C).

(c) Class IIIB liquids include those having a flash point at or above 200°F (93.4°C).

Flammable liquid (Class I). Any liquid having a closed-cup flash point below 100°F (37.8°C) and having a vapor pressure not exceeding 40 psia (276 kPa) at 100°F (37.8°C).

Gallon. A standard U.S. gallon.

Limited-Combustible Material. A material, as defined in NFPA 220, Standard on Types of Building Construction, not complying with the definition of noncombustible material that, in the form in which it is used, has a potential heat value not exceeding 3500 Btu/lb (8141 kJ/kg) and complies with one of the following paragraphs (a) or (b). Materials subject to an increase in combustibility or flame spread rating, beyond the limits herein established, through the effects of age, moisture, or other atmospheric condition are considered combustible.

(a) Materials having a structural base of noncombustible material, with a surfacing not exceeding a thickness of 1/8 in. (3.2 mm) that has a flame spread rating not greater than 50.

(b) Materials, in the form and thickness used, other than as described in (a), having neither a flame spread rating greater than 25 nor evidence of continued progressive combustion and of such composition that surfaces that would be exposed by cutting through the material on any plane would have neither a flame spread rating greater than 25 nor evidence

of continued progressive combustion. Noncombustible material. A material, as defined in NFPA 220, Standard on Types of Building Construction, that, in the form in which it is used and under the conditions anticipated, will not ignite, burn, support combustion, or release flammable vapors when subjected to fire or heat. Materials reported as noncombustible, when tested in accordance with ASTM E 136, Standard Method of Test for Behavior of Materials in a Vertical Tube Furnace at 750°C, are considered noncombustible materials.
Outdoors. Location outside of any building or structure or locations under a roof, weather shelter, or canopy provided this area is not enclosed on more than two sides.
Separate building. A detached, noncommunicating building used exclusively to house a hydrogen system. Shall. Indicates a mandatory requirement.
Special room. A separate enclosed area that is part of or attached to another building and is used exclusively for a hydrogen system.
Standard. A document, the main text of which contains only mandatory provisions using the word "shall" to indicate requirements and which is in a form generally suitable for mandatory reference by another standard or code or for adoption into law. Nonmandatory provisions shall be located in an appendix, footnote, or fine-print note and are not to be considered a part of the requirements of a standard.

History: 2008 AACS.

R 29.7073 Prohibitions.

Rule 73. Sections 1-4 to 1-4.4 of the storage and handling of gaseous and Liquefied H_2 code are added as follows:
1-4 Prohibitions.
1-4.1 Any liquefied H_2 storage container system or practice that is not in compliance with these rules shall be considered to be in violation of these rules.
1-4.2 Upon notification by the department, a person shall not deliver liquefied H_2 to a storage container system under any circumstances that are prohibited by these rules or if a container is not in compliance with these rules. Such notification may include a verbal or written communication or an affixed written notification on the H_2 system.
1-4.3 A person shall not tamper with, remove, or disregard written notification affixed to the storage container system.
1-4.4 An owner or operator shall not continue to use a storage container system that is causing a release and shall expeditiously empty the system or the component that is causing the release until the system is repaired or replaced.

History: 2008 AACS.

R 29.7074 Installation application.

Rule 74. Sections 1-5 to 1-5.4 of the storage and handling of gaseous and Liquefied H_2 code are added as follows:
1-5 Installation application.

1-5.1 An application for plan review shall be submitted, on a form provided by the department, by the owner or owner's designee on behalf of the owner to the department not less than 30 days before the installation of an H_2 storage container system.

1-5.1.1 The installation application shall include all of the following information:

(a) A plot map showing all of the following within 100 feet (30.5 meters) of any portion from the container system:

(i) The location of the following:

(A) Buildings.

(B) Public roadways.

(C) Railroad mainlines.

(D) Public sidewalks.

(E) Overhead power lines.

(ii) The proposed location of the dispensing station.

(iii) The location of property lines.

(iv) The locations of existing aboveground and underground tanks storing flammable and combustible liquids, and flammable, compressed or liquefied gases.

(v) The location of the point of transfer in relationship to all of the following:

(A) The container.

(B) Buildings.

(C) Public ways.

(D) Outdoor places of public assembly.

(E) Driveways.

(F) Main line railroad track center lines.

(G) The line of adjoining property that may be built upon.

(H) Aboveground and underground tanks storing flammable and combustible liquids and/or flammable, compressed, or liquefied gases.

(b) The construction material, the dimensions and the capacity of each container.

(c) The type of container venting and pressure relief.

(d) The compressor(s) size (psig and scfm).

(e) Container appurtenances.

(f) A piping diagram showing sizes, valves, pressure relief and fittings, and control devices.

1-5.2 Upon acknowledged receipt of the plans, the department shall issue a plan review report within 30 days. If the plan review report is not issued within 30 days, the installation may be constructed according to the submitted plans and shall be in compliance with these rules.

1-5.3 An applicant shall notify the department upon completion of the installation before the installation is placed into service. The department shall inspect the installation after receiving notification and shall certify the installation, if the requirements of the rules are met. If the inspection is not made within 2 working days, then the applicant may place the installation into service, or if intended to be underground, mounded, or partially underground, may cover the installation from sight, and shall
notify the department, and shall submit a notarized affidavit to the department attesting to the fact that the installation complies with the installation application submitted and the applicable rules.

1-5.4 Upon the owner's request, all plans and specifications that are submitted to the department for review shall be returned after the department has certified the installation or within 30 working days after notification to the department of the completion of the installation. Plans and specifications may be marked "Confidential-Do Not Copy" at the time they are submitted.

History: 2008 AACS.

R 29.7075 Installation application fees and annual certification.

Rule 75. Sections 1-6 to 1-6.2 of the storage and handling of gaseous and Liquefied H_2 code are added as follows:

1-6 Installation application fees and annual certification.

1-6.1 Only an owner of an H_2 container system for which an installation application is required to be submitted under section 1-5 of the H_2 code shall be required to pay fees as specified in 1941 PA 207, MCL 29.5.

1-6.2 For the purpose of assessing fees, each liquefied H_2 permanent installation, or any container filling location, shall be considered a container, as defined in section 5 of 1941 PA 207, MCL 29.5.

History: 2008 AACS.

R 29.7076 Equivalency.

Rule 76. Sections 1-7 to 1-7.3 of the storage and handling of gaseous and Liquefied H_2 code are added as follows:

1-7 Equivalency.

1-7.1 Nothing in this H_2 code shall be intended to prevent the use of systems, methods, or devices having equivalent or superior quality, strength, fire resistance, effectiveness, durability, environmental protection capability, or safety over those prescribed by the H_2 code, if technical documentation is submitted to the department to demonstrate equivalency and the system, method, or device is approved for the intended purpose.

1-7.2 An owner or operator may make an application for a variance of rules by applying to the department with a satisfactory explanation of why compliance is not possible. The department may approve the variance request upon finding that the variance is based upon the best interest of public health, safety, and welfare, and the environment.

1-7.3 A person aggrieved by a final decision of the department on a request for variance or an equivalency determination may appeal to the circuit court within 21 days of receiving the decision.

History: 2008 AACS.

R 29.7077 Personnel.

Rule 77. Sections 1-8 and 1-8.1 of the storage and handling of gaseous and Liquefied H_2 code are added as follows:

1-8 Personnel.

1-8.1 In the interest of safety, all persons involved in handling H_2 shall be trained in the proper handling and operating procedures. This training shall be acceptable to the department.
Exception: This training is not required for a person dispensing H_2 into a vehicle at an attended self-service facility.

History: 2008 AACS.

R 29.7078 Application.

Rule 78. Sections 1-9 to 1-9.4 of the storage and handling of gaseous and Liquefied H_2 code are added as follows:
1-9 Application.
1-9.1 The application of this standard at places of public assembly shall meet the requirements of section 3-2.2(a) and the approval of the department.
1-9.2 This standard does not apply to flow-through process containers.
1-9.3 When required by the department, H_2 introduced into any system covered by this code shall have a leak detection system acceptable to the department and based on the best interest of public health, safety, and welfare, and the environment.
1-9.4 Liquefied H_2 in fuel containers on vehicles and mobile equipment shall not be included in determining the maximum allowable quantities.

History: 2008 AACS.

Chapter 2 Design of liquefied hydrogen systems

R 29.7079 Containers.

Rule 79. Sections 2-1 to 2-1.10.1.3 and figure 2-1.2 of the storage and handling of gaseous and Liquefied H_2 code are added as follows:
2-1 Containers.
2-1.1 H_2 containers shall comply with the following.
(a) Storage containers shall be designed, constructed, and tested in accordance with appropriate requirements of the ASME "Boiler and Pressure Vessel Code," section VIII, "Rules for the Construction of Pressure Vessels," adopted by reference in section 8-1.
(b) Portable containers shall be designed, constructed, and tested in accordance with title 49 CFR.
(c) Welding or brazing for the repair or alteration of an ASME pressure vessel shall comply with the standard adopted in section 8-1.2.1.
(d) Other welding or brazing shall be permitted only on saddle plates, lugs, or brackets which are attached to the pressure vessel by the pressure vessel manufacturer.
(e) The exchange or interchange of pressure vessel appurtenances intended for the same purpose shall not be considered a repair or alteration but must comply with these rules.
2-1.2 Permanently installed containers shall be provided with substantial supports of noncombustible material securely anchored on firm foundations of noncombustible material, and shall comply with the following subsections as applicable:

(a) Steel supports in excess of 18 inches (46 centimeters) in height shall be protected with a protective coating having a 2-hour fire resistance rating, see figure 2-1.2.

(b) If a permanently installed aboveground container is in an area that is subject to buoyant forces, provision shall be made to prevent the container, either full or empty, from floating during a rise in water level, including up to the established maximum flood stage.

(c) Horizontally installed containers shall have not more than 2 points of support longitudinally or other methods approved by the department based on the best interest of public health, safety, and welfare and the environment.

(d) Horizontally installed containers shall not be in direct contact with each other.

(e) Aboveground containers shall be protected by painting or other equivalent means where necessary to inhibit corrosion.

(f) Temperature effects. Foundations or supports that could come in contact with the cryogenic fluid in the event of a spillage, such as at fill connections, and flanges, shall be constructed of materials that are capable of withstanding the cryogenic temperature effects, such as concrete and stainless steel.

(g) Excessive loads. Stationary containers shall be supported to prevent the concentration of excessive loads causing differential settlement of the support system.

(h) Expansion and contraction. Foundations for horizontal containers shall be constructed to accommodate expansion and contraction of the container.

(i) Support of ancillary equipment. Foundations shall be provided to support the weight of ancillary equipment such as vaporizers and/or heat exchangers.

Figure 2-1.2

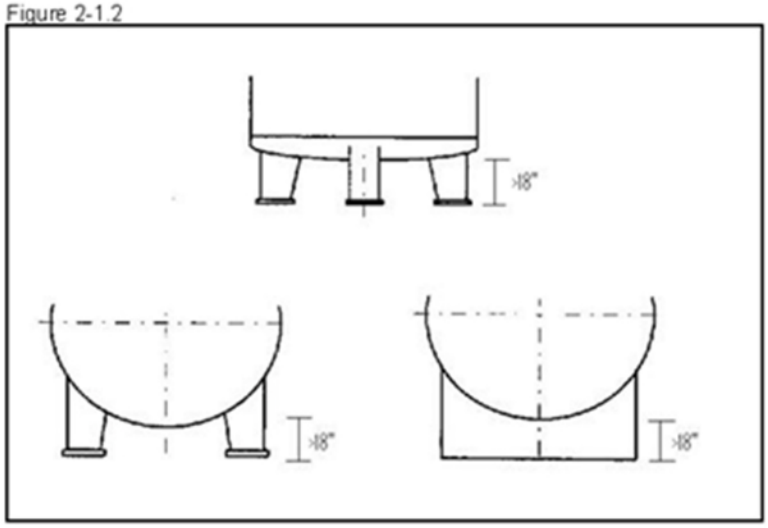

2-1.3 Marking. Liquefied H_2 containers and systems shall be marked in accordance with this section.

2-1.3.1 Portable containers. Portable containers shall be marked in accordance with CGA C-7, "Guide to the Preparation of Precautionary Labeling and Marking of Compressed Gas Containers," adopted by reference in section 8.

2-1.3.2 Stationary containers. Stationary containers shall be marked in accordance with NFPA 704, "Standard Systems for the Identification of the Hazards of Materials for Emergency Response," adopted by reference in section 8.
2-1.3.3 Identification of contents. Each container shall be marked as follows:
LIQUEFIED HYDROGEN - FLAMMABLE GAS in letters that are not less than 3 inches (7.62 centimeters) in height.
2-1.3.4 Container specification. Stationary containers shall be marked with the manufacturing specification and maximum allowable working pressure on a permanent nameplate in accordance with the standard to which the container was manufactured.
2-1.4 An owner or operator that has had a container subjected to heat exposure due to an engulfing fire, a fire in which at least 25% of the container surface is exposed, shall remove the container from service, and shall not return the container to service, unless the owner or operator provides documentation to substantiate mechanical and performance integrity of the container in accordance with section 2-1.1 to the department. Such documentation shall be issued by a qualified engineer.
2-1.5 Guard posts or other approved means shall be provided to protect a container system subject to vehicular damage. When guard posts are installed, all of the following design specifications shall be met:
(a) Guard posts shall be constructed of steel not less than 4 inches (10.16 centimeters) in diameter and shall be filled with concrete.
(b) Guard posts shall be spaced not more than 4 feet (1.2 meters) on center.
(c) Guard posts shall be set not less than 4 feet (1.2 meters) deep in a concrete footing that is not less than 15 inches (38.1 centimeters) in diameter.
(d) Guard posts shall be not less than 4 feet (1.2 meters) in height above grade.
(e) Other means as approved by the department based on the best interests of public health, safety, and welfare, and the environment.
2-1.6 Physical protection. Containers, piping, valves, pressure-relief devices, regulating equipment, and other appurtenances shall be protected against physical damage and tampering.
2-1.7 Portable containers subject to shifting or upset shall be secured. Nesting shall be permitted as a means of securing portable containers.
2-1.8 Overfill protection and prevention systems. An approved means or method shall be provided to prevent the overfilling of storage containers.
2-1.9 Vacuum level monitoring. An approved monitoring method shall be provided to indicate vacuum degradation within the vacuum jacket(s).
2-1.10 Underground containers. Underground containers for the storage of liquefied H_2 shall be in accordance with this subsection.
2-1.10.1 Construction. Storage containers for liquefied H_2 shall be designed and constructed in accordance with section VIII of ASME "Boiler and Pressure Vessel Code," adopted by reference in section 8, and shall be vacuum-jacketed in accordance with section 2-1.10.1.1.
2-1.10.1.1 Vacuum jacket construction. The vacuum jacket shall be designed and constructed in accordance with section VIII of ASME "Boiler and Pressure Vessel Code," and shall be designed to withstand the anticipated loading, including loading from vehicular traffic, where applicable. Portions of the vacuum jacket installed below grade shall be designed to withstand anticipated soil, hydrostatic, and seismic loading.

2-1.10.1.2 Material. The vacuum jacket shall be constructed of stainless steel or other approved corrosion-resistant material.
2-1.10.1.3 Corrosion protection. The underground container shall be protected by an engineered corrosion protection system designed by a corrosion expert. If cathodic protection is used the maintenance schedule shall meet the requirements of section 5-3.

History: 2008 AACS.

R 29.7080 Pressure relief devices.

Rule 80. Sections 2-2.1 to 2-2.5 are reproduced from NFPA 50B, and sections 2-2.6 to 2-2.16 of the storage and handling of gaseous and Liquefied H_2 code are added as follows:
2-2 Pressure relief devices.
2-2.1 Stationary liquefied hydrogen containers shall be equipped with pressure relief devices sized in accordance with CGA S-1.3, Pressure Relief Device Standards - Part 3 - Compressed Gas Storage Containers.
2-2.2 Portable liquefied hydrogen containers complying with DOT Specifications and Regulations shall be equipped with pressure relief devices as required in DOT Specifications and Regulations. Pressure relief devices shall be sized in accordance with the requirements of CGA S-1.1, Pressure Relief Device Standards - Part 1 - Cylinders for Compressed Gases, and CGA S-1.2, Pressure Relief Device Standards - Part 2 - Cargo and Portable Containers for Compressed Gases.
2-2.3 Pressure relief devices shall be arranged to discharge unobstructed to the outdoors and in such a manner as to prevent impingement of escaping liquid or gas upon the container, adjacent structures, or personnel. (See 3-1.5 for venting of pressure relief devices in special locations.)
2-2.4 Pressure relief devices or vent piping shall be designed or located so that moisture cannot collect and freeze in a manner that would interfere with proper operation of the device.
2-2.5 Pressure relief devices shall be provided in piping wherever liquefied hydrogen could be trapped between closures.
2-2.6 Stationary containers shall be provided with a sign, in letters not less than 1 inch (2.54 centimeters) in height, placed in proximity to the primary container pressure relief valve vent stack that warns against spraying water on or into the vent opening.
2-2.7 The pressure-relief device shall have the capacity to prevent the pressure inside the container from exceeding 110% of the maximum design pressure.
2-2.8 H_2 venting systems discharging to the atmosphere shall be in accordance with CGA G-5.5, adopted by reference in section 8.
2-2.9 Components which come in contact with cryogenic H_2 under normal operating conditions shall be suitable for operation at a temperature of -430 degrees Fahrenheit (-236 degrees Celsius).
2-2.10 Individual discharge lines and adapters shall be sized, located, and secured so as to permit the maximum required relief discharge capacity to minimize the possibility of physical damage. The discharge lines shall be able to withstand the pressure of the relief vapor discharge when the relief is in the full-open position.
2-2.11 Secondary relief devices, designed to provide additional relief in emergencies, shall be piped away from the container independently.

2-2.12 Shutoffs between pressure-relief devices and containers. Shutoff valves shall not be installed between pressure-relief devices and containers unless the valves or their use meets the requirements of this section.
2-2.12.1 Security. Shutoff valves shall be of a locking type and their use shall be limited to service-related work performed by the supplier under the requirements of ASME "Boiler and Pressure Vessel Code," adopted by reference in section 8.
2-2.12.2 Multiple pressure-relief devices. Shutoff valves controlling multiple pressure-relief devices on a container shall be installed so that either the type of valve installed or the arrangement provides the full required flow through the minimum number of required relief devices at all times.
2-2.13 Safety and relief valves. Pressure relief valves for liquefied H_2 systems, if externally adjustable, shall be provided with a means for sealing the adjustment to prevent tampering.
2-2.13.1 If at any time it is necessary to break such a seal, the valve shall be removed from service until it has been reset and sealed.
2-2.13.2 Adjustments shall be made only by the manufacturer or other organizations having competent personnel and facilities for the repair, adjustment, and testing of such valves.
2-2.13.3 The organization making such adjustment shall attach a permanent tag with the setting, capacity, and date.
2-2.14 The thermal expansion relief valve shall be installed as required to prevent overpressure in any section of a liquid or cold vapor pipeline that can be isolated by valves.
2-2.14.1 Thermal expansion relief valves shall be set to discharge above the maximum pressure normally expected in the line but less than the rated test pressure of the line it protects.
2-2.14.2 Discharge from thermal expansion relief valves shall be directed so as to minimize hazard to personnel and other equipment.
2-2.15 Pressure relief valves shall be tested at least every 5 years.
Exception: Thermal relief valves will not be tested.
2-2.16 Heat exchangers, vaporizers, insulation casing surrounding containers, vessels, and coaxial piping systems in which liquefied or cold vapor H_2 could be trapped shall be provided with a pressure-relief device.

History: 2008 AACS.

R 29.7081 Piping, tubing, and fittings.

Rule 81. Sections 2-3.1, and 2-3.4 are reproduced from NFPA 50B, and sections 2-3.2, 2-3.2.1, 2-3.3, 2-3.5, 2-3.5.1, 2-3.6 to 2-3.17 of the storage and handling of gaseous and Liquefied H_2 code are added as follows:
2-3 Piping, tubing, and fittings.
2-3.1 Piping, tubing, and fittings, and gasket and thread sealants shall be suitable for hydrogen service at the pressures and temperatures involved. Consideration shall be given to the thermal expansion and contraction of piping systems when exposed to temperature fluctuations of ambient to liquefied hydrogen temperatures.
2-3.2 Material specifications and thickness requirements for piping and tubing shall conform to ASME B31.3, "Process Piping." Piping or tubing for operating temperatures below -20 degrees Fahrenheit (-29 degrees Celsius) shall be fabricated from materials

meeting the impact test requirements of Chapter III of ASME B31.3 when tested at the minimum operating temperature to which the piping can be subjected in service.
2-3.2.1 Aluminum shall not be used with liquefied H_2 piping except for ambient air vaporizers.
2-3.3 Joints in piping and tubing shall be made by welding, brazing, or flanged. Brazing materials shall have a melting point above 1,000 degrees Fahrenheit (538 degrees Celsius). Flanged connection shall use a gasket that is suitable for H_2.
2-3.4 Means shall be provided to minimize exposure of personnel to piping operating at low temperatures and to prevent air condensate from contacting piping, structural members, and surfaces not suitable for cryogenic temperatures. Insulation shall be of noncombustible material and shall be designed to have a vaportight seal in the outer covering to prevent the condensation of air and subsequent oxygen enrichment within the insulation. The insulation material and outside shield also shall be of adequate design to prevent attrition of the insulation due to normal operating conditions.
2-3.5 Uninsulated piping and equipment that operate at liquid hydrogen temperatures shall not be installed above asphalt surfaces or other combustible materials to prevent contact of oxygen enriched liquefied air with such materials. Drip pans may be installed under uninsulated piping and equipment to control drips and vaporize condensed liquefied air.
2-3.5.1 Where insulation materials are used, the insulation shall be compatible with the equipment with which the insulation is in contact.
2-3.6 A piping system shall be substantially supported and protected against physical damage and excessive stresses arising from settlement, vibration, expansion, or contraction. Supports for aboveground piping shall be constructed of noncombustible material.
2-3.7 Aboveground piping systems shall be protected from corrosion in compliance with recognized standards. Underground piping system shall be in compliance with section 5-3.
2-3.8 Aboveground piping systems shall be marked in accordance with the following:
(a) Marking shall include the name of the gas and direction of flow arrow.
(b) Marking for piping systems shall be provided at the following locations:
(i) At each critical process control valve.
(ii) At wall, floor, or ceiling penetrations.
(iii) At each change in direction.
(iv) At a minimum of every 20 feet (6.1 meters) or fraction thereof throughout the piping run.
2-3.9 Underground piping shall be installed on a bedding of at least 6 inches (15.24 centimeters) of well-compacted backfill material.
2-3.10 In areas subject to vehicle traffic, the pipe trench shall be of sufficient depth to permit a cover of not less than 18 inches (45.72 centimeters) of well compacted backfill material and pavement.
Exception: In paved areas where a minimum of 8 inches (20.32 centimeters) of asphalt paving is used, the depth of the backfill between the topmost tier of piping and the paving can be reduced to not less than 8 inches (20.32 centimeters).
Exception: In paved areas where a minimum of 6 inches (15.24 centimeters) of reinforced concrete paving is used, the depth of backfill between the topmost tier of the piping and the paving can be reduced to not less than 4 inches (10.2 centimeters).

2-3.11 In areas not subject to vehicle traffic, the pipe trench shall be of sufficient depth to permit 6 inches (15.24 centimeters) each of bedding and cover of well-compacted backfill material. A greater burial depth shall be provided when required by the manufacturer's instructions.
2-3.12 Piping within the same trench shall be separated by more than 3 times the diameter of the larger adjacent pipe.
2-3.13 Piping to equipment shall be provided with an accessible, manual shutoff valve.
2-3.14 Pipe, tubing, fittings, and other piping components shall be capable of withstanding a hydrostatic test of at least 3 times the rated pressure without structural failure as documented by the manufacturer.
2-3.15 Underground liquefied H_2 piping shall be vacuum-jacketed. Unjacketed piping shall not be buried and shall exit the container annular space above grade.
2-3.16 All natural gas piping shall be installed in accordance with R 29.4601 et seq.
2-3.17 All liquefied petroleum gas piping shall be installed in accordance with R 29.4001 et seq.

History: 2008 AACS.

R 29.7082 Equipment assembly.

Rule 82. Sections 2-4.1 and 2-4.2 are reproduced from NFPA 50B, and sections 2-4.3 to 2-4.8 of the storage and handling of gaseous and Liquefied H_2 code are added as follows:
2-4 Equipment assembly.
2-4.1 Valves, gauges, regulators, and other accessories shall be suitable for liquefied hydrogen service and for the pressures and temperatures involved.
2-4.2 Installation of liquefied hydrogen systems shall be supervised by personnel familiar with proper installation practices and with their construction and use.
2-4.3 Aboveground containers, piping, valves, regulating equipment, and other accessories shall be readily accessible and shall be protected against physical damage and against tampering.
2-4.4 An automatic emergency shutoff valve shall be located in liquid product withdrawal lines as close to the container as practical.
2-4.5 The automatic shutoff valve shall be provided with a remotely located, manually activated, shutdown control.
2-4.6 The shutoff valve shall be connected to the storage container by means of welded connections without the use of flanges, or other appurtenances except that a manual shutoff valve equipped with welded connections is allowed to be installed immediately upstream of the automatic shutoff valve to allow for maintenance of the automatic valve.
2-4.7 Connections downstream of the shutoff valve shall be in accordance with ASME B31.3, "Process Piping," adopted by reference in section 8.
2-4.8 Cabinets or enclosures containing H_2 control equipment shall be ventilated to prevent any accumulations of H_2 gas.

History: 2008 AACS.

R 29.7083 Testing.

Rule 83. Sections 2-5 and 2-5.1 are reproduced from NFPA 50B, and section 2-5.2 of the storage and handling of gaseous and Liquefied H_2 code is added as follows:
2-5 Testing.
2-5.1 After installation, all field-erected piping shall be tested and proved hydrogen gas-tight at operating pressure and temperature.
2-5.2 Containers, if out-of-service in excess of 1 year, shall be inspected and tested as outlined in 2-5.1. The pressure relief devices shall be checked to determine if they are operable, properly set, and within test service dates as per section 2-2.15.

History: 2008 AACS.

R 29.7084 Liquefied H_2 vaporizers.

Rule 84. Sections 2-6.1 to 2-6.4 are reproduced from NFPA 50B, and sections 2-6.5 to 2-6.13 of the storage and handling of gaseous and Liquefied H_2 code are added as follows:
2-6 Liquefied H_2 vaporizers.
2-6.1 The vaporizer shall be anchored and its connecting piping shall be sufficiently flexible to provide for the effect of expansion and contraction due to temperature changes.
2-6.2 The vaporizer and its piping shall be protected on the hydrogen and heating media sections with pressure relief devices.
2-6.3 Heat used in a liquefied hydrogen vaporizer shall be indirectly supplied utilizing media such as air, steam, water, or water solutions.
2-6.4 A low-temperature shutoff switch or valve shall be provided in the vaporizer discharge piping to prevent flow of liquefied hydrogen in the event of the loss of the heat source.
2-6.5 Vaporizers shall be designed for a working pressure at least equal to the maximum discharge pressure of the pump or the pressurized system that supplies them, whichever is greater.
2-6.6 The discharge valve of each vaporizer, if provided, its piping components, the relief valves installed upstream of the discharge valve, the vaporizer piping, and related components shall be suitable for operation at a liquefied H_2 temperature of -423 degrees Fahrenheit (217.2 degrees Celsius).
2-6.7 Multiple vaporizers shall be manifolded such that both inlet and discharge block valves are installed on each vaporizer.
2-6.8 A low temperature switch or other accepted means shall be installed on the vaporizer discharge to eliminate the possibility of cryogenic H_2 entering gaseous H_2 containers and other equipment not designed for cryogenic H_2 temperatures.
2-6.9 Relief valves on heated vaporizers shall be located so that they are not subjected to temperatures exceeding 140 degrees Fahrenheit (60 degrees Celsius) during normal operation unless they are designed to withstand higher temperatures.
2-6.10 The combustion air required for the operation of integral heated vaporizers or the primary heat source for remote heated vaporizers shall be taken from outside an enclosed structure or building.
2-6.11 Installation of internal combustion engines or gas turbines shall conform to R 29.5101 et seq.

2-6.12 Securing of vaporizers. Vaporizers, heat exchangers, and similar equipment shall be secured to foundations, and their connecting piping shall be flexible to provide for the effects of expansion and contraction due to temperature changes.
2-6.13 Vaporizers and heaters shall be provided with instrumentation to monitor outlet temperatures.
Exception: Ambient pressure-building coil vaporizers that are fed with liquid from, and return vapor to, a container.

History: 2008 AACS.

R 29.7085 Electrical systems.

Rule 85. Sections 2-7 to 2-7.2 of the storage and handling of gaseous and Liquefied H_2 code are added as follows:
2-7 Electrical systems.
2-7.1 Electrical equipment and wiring shall be specified and installed in accordance with NFPA 70, "National Electrical Code," adopted by reference in section 8.
2-7.2 Static protection shall be required when liquefied H_2 cargo transport vehicles are loaded or unloaded. This can be achieved when cargo transport vehicles or marine equipment are loaded or unloaded by grounding cable, conductive hose, flexible metallic tubing, or pipe connections where both halves of metallic couplings are in contact.

History: 2008 AACS.

R 29.7086 Bonding and grounding.

Rule 86. Section 2-8 is reproduced from NFPA 50B as follows:
2-8 Bonding and grounding. The liquefied hydrogen container and associated piping shall be electrically bonded and grounded.

History: 2008 AACS.

R 29.7087 Approval.

Rule 87. Sections 2-9 and 2-9.1 of the storage and handling of gaseous and Liquefied H_2 code are added as follows:
2-9 Approval.
2-9.1 Systems and all system components shall be listed or approved, including, but not limited to all of the following:
(a) A container.
(b) A pressure relief device, including a pressure relief valve.
(c) A pressure gauge.
(d) A pressure regulator.
(e) A valve.
(f) A vaporizer.
(g) A hose and hose connection.
(h) A vehicle fueling connection.

(i) Electrical equipment related to the H_2 system.
(j) A dispenser.
(k) Emergency shutoff valves.
(l) Metal hydride storage.
(m) Gas detection equipment and alarms.
(n) H_2 generators.
(o) Pumps or compressors.
(p) Stationary engine fuel system.

History: 2008 AACS.

R 29.7088 Pressure gauges.

Rule 88. Sections 2-10 to 2-10.2 of the storage and handling of gaseous and Liquefied H_2 code are added as follows:

2-10 Pressure gauges.

2-10.1 A pressure gauge, if provided, shall be capable of reading at least 1.2 times the system MAWP.

2-10.2 Pressure gauges shall be installed on each pump and compressor discharge.

History: 2008 AACS.

R 29.7089 Pressure regulators.

Rule 89. Sections 2-11 to 2-11.3 of the storage and handling of gaseous and Liquefied H_2 code are added as follows:

2-11 Pressure regulators.

2-11.1 A pressure regulator inlet and each chamber shall be designed for its service pressure with a safety factor of at least 3.

2-11.2 Pressure chambers shall provide for overpressure relief, if required.

2-11.3 Regulators shall be designed, installed, or protected so that their operation is not affected by freezing rain, sleet, snow, ice, mud, insects, or debris. Regulator protection shall be permitted to be integral with the regulator.

History: 2008 AACS.

R 29.7090 Valves.

Rule 90. Sections 2-12 to 2-12.2 of the storage and handling of gaseous and Liquefied H_2 code are added as follows:

2-12 Valves.

2-12.1 Shutoff valves shall have a rated service pressure not less than the rated service pressure of the entire system and shall be capable of withstanding a hydrostatic test of at least 3 times the rated service pressure without rupture.

2-12.1.1 Leakage shall not occur when tested at least 1.1 times the rated service pressure, using an inert gas compatible with industry practices.

2-12.2 Valves of a design that allows the valve stem to be removed without removal of the complete valve bonnet or without disassembly of the valve body shall not be used.

History: 2008 AACS.

R 29.7091 Hose and hose connections.

Rule 91. Sections 2-13 to 2-13.6 of the storage and handling of gaseous and Liquefied H_2 code are added as follows:

2-13 Hose and hose connections.

2-13.1 Hose shall be constructed of or lined with materials that are resistant to corrosion and compatible with H_2.

2-13.2 Hose, metallic hose, flexible metal hose, tubing, and their connections shall be designed for the most severe pressures and temperatures expected under normal operating conditions with a burst pressure of at least 3 times the service pressure.

2-13.3 Prior to use, hose assemblies shall be tested by the manufacturer or its designated representative at a pressure at least 1.1 times the service pressure.

2-13.4 Hose and metallic hose shall be distinctly marked by the manufacturer either by the manufacturer's permanently attached tag or by distinct markings indicating the manufacturer's name or trademark, applicable service identifier and design pressure.

2-13.5 The use of hose in an installation shall be limited to the following:

(a) Vehicle fueling hose.

(b) Inlet connection to compression equipment.

(c) Section of metallic hose not exceeding 36 inches (1 meter) in length in the pipeline to provide flexibility where necessary.

(d) Transfer hoses for connecting the mobile supply equipment to a local storage system.

2-13.6 Each section shall be so installed that it is protected against mechanical damage and is readily visible for inspection.

History: 2008 AACS.

R 29.7092 Vehicle fueling connection.

Rule 92. Sections 2-14 to 2-14.2 of the storage and handling of gaseous and Liquefied H_2 code are added as follows:

2-14 Vehicle fueling connection.

2-14.1 Fueling receptacles and nozzles for liquefied H_2 service shall be in accordance with a standard acceptable to the department based on the best interest of public health, safety, and welfare, and the environment.

2-14.2 The use of adapters shall be prohibited.

History: 2008 AACS.

R 29.7093 Stationary pumps and compressors.

Rule 93. Sections 2-15 to 2-15.5 of the storage and handling of gaseous and Liquefied H_2 code are added as follows:

2-15 Stationary pumps and compressors.
2-15.1 Valves shall be installed such that each pump or compressor can be isolated for maintenance. Where pumps or centrifugal compressors are installed for operation in parallel, each discharge line shall be equipped with a check valve to prevent the backflow of liquid from 1 system to the other.
2-15.2 Foundations for cryogenic pumps or compressors shall be designed and constructed to prevent frost heaving.
2-15.3 Operation of all pumps and compressors shall cease when the facility's emergency shutdown device (ESD) system is initiated.
2-15.4 Each pump shall be provided with an adequate vent or relief valve that will prevent over pressurizing of the pump case under normal conditions including the maximum possible rate of cool down.
2-15.5 Vents shall be piped outside of buildings to a point of safe discharge.

History: 2008 AACS.

R 29.7094 Liquefied H_2 to gaseous H_2 systems.

Rule 94. Sections 2-16 to 2-16.4 of the storage and handling of gaseous and Liquefied H_2 code are added as follows:
2-16 Liquefied H_2 to gaseous H_2 systems.
2-16.1 Section 2-16 shall apply to the design, construction, installation, and operation of equipment used to produce gaseous H_2 from liquefied H_2.
2-16.2 Gaseous H_2 storage containers and equipment located downstream of liquefied H_2 containers are not regulated by section 2-16. Gaseous H_2 storage containers and equipment shall comply with part 2 of these rules.
2-16.3 In addition to the emergency shutdown systems described in section 7-6, the emergency shutdown system shall also shut off the liquid supply and power to the liquefied H_2 transfer equipment necessary for producing gaseous H_2 from liquefied H_2.
2-16.4 Transfer piping, pumps, and compressors shall be protected from vehicle collision damage and shall comply with section 2-1.5.

History: 2008 AACS.

R 29.7095 Temporary installations.

Rule 95. Sections 2-17 and 2-17.1 of the storage and handling of gaseous and Liquefied H_2 code are added as follows:
2-17 Temporary installations.
2-17.1 ASME or U.S. DOT containers that are used as portable storage containers, see definition of portable container in section 1-5, for temporary, less than 6 months at any given location, stationary service shall comply with the following:
(a) If mounted on legs or supports, then such supports shall be of steel and either shall be welded to the container by the manufacturer at the time of fabrication or shall be attached to lugs that have been so welded to the container. The legs or supports or the lugs for the attachment of these legs or supports shall be secured to the container in accordance with

the code or rule under which the container was designed and built, to withstand loading in any direction equal to twice the weight of the empty container and attachments.

(b) If the container is mounted on a trailer or semitrailer running gear so that the unit can be moved by a conventional over-the-road tractor, then attachment to the vehicle, or attachments to the container to make it a vehicle, shall comply with the appropriate U.S. DOT requirements for cargo tank service. The unit also shall comply with applicable state and U.S. DOT motor carrier regulations and shall be approved by the department.

History: 2008 AACS.

R 29.7096 Indoor fueling.

Rule 96. Section 2-18 of the storage and handling of gaseous and Liquefied H_2 code is added as follows:

2-18 Indoor fueling. Indoor fueling of liquefied H_2 is not permitted unless department approved.

History: 2008 AACS.

Chapter 3 Location of liquefied hydrogen systems

R 29.7097 General requirements.

Rule 97. Sections 3-1.1 and 3-1.3 to 3-1.5 are reproduced from NFPA 50B, and sections 3-1.2, 3-1.6 to 3-1.13 of the storage and handling of gaseous and Liquefied H_2 code is added as follows:

3-1 General requirements.

3-1.1 The storage containers shall be located so that they are readily accessible to mobile supply equipment at ground level and to authorized personnel. Roadways or other means of access for emergency equipment, such as fire department apparatus, shall be provided.

3-1.2 Systems shall not be located beneath or where exposed by failure of the following:

(a) Electric power lines as follows:

(i) Not less than 50 feet (15.2 meters) horizontally from the vertical plane below the nearest overhead wire of an electric trolley, train, or bus line.

(ii) Not less than 5 feet (1.5 meters) horizontally from the vertical plane below the nearest overhead electrical wire.

(b) Piping containing all classes of flammable and combustible liquids

(c) Piping containing oxidizing materials

3-1.3 Where a liquefied hydrogen container is installed on ground that is level with or lower than the adjacent storage of all classes of flammable and combustible liquid or liquid oxygen, suitable protective means shall be taken to prevent accumulation of liquids within 50 ft (15.2 m) of the liquefied hydrogen container. Protective means shall include diking, diversion curbs, or grading of the flammable and combustible liquid storage or liquid oxygen storage.

3-1.4 Storage sites shall be fenced and posted to prevent entrance by unauthorized personnel. Sites also shall be placarded as follows:

LIQUEFIED HYDROGEN FLAMMABLE GAS NO SMOKING - NO OPEN FLAMES

3-1.5 If liquefied hydrogen is located (as specified in table 3-2.1) in a separate building, in a special room, or inside buildings where not in a special room or exposed to other occupancies, containers shall have the pressure relief devices vented unobstructed to the outdoors at a minimum elevation of 25 ft (7.6 m) above grade to a safe location as required in 2-2.3.

3-1.6 Underground systems shall be located underground, mounded, or partially buried and outside of any buildings. Buildings shall not be constructed over any underground, mounded, or partially buried container. Sides of adjacent containers shall be separated by not less than 3 feet (1 meter).

(a) Excavation for underground, mounded, or partially buried containers shall be made with due care to avoid damage to an existing structure or its foundation. Containers shall not be installed where loads from adjacent structures may be transmitted to the container. A structure or foundation of a structure on the same property shall not be erected or constructed within 10 feet (3.1 meters) of any point on the container surface, unless the footings extend to the bottom of the container. A container shall not be installed less than 10 feet (3.1 meters) from the nearest wall of any basement, pit, or property line.

3-1.7 All underground containers shall be set on firm foundation and surrounded with 6 inches (15.24 centimeters) minimum of noncorrosive inert material such as clean sand or pea gravel.

3-1.8 Underground or mounded containers shall be covered with not less than 2 feet (60.96 centimeters) of earth or with not less than 1 foot (30.48 centimeters) of earth on top of which shall be placed a reinforced concrete slab not less than 4 inches (10.16 centimeters) thick. If containers are likely to be subjected to traffic, they shall be protected against damage from vehicles passing over them by at least 3 feet (1 meter) of earth cover plus 6 inches (15.24 centimeters) of reinforced concrete. When reinforced concrete paving is used as part of the protection, it shall extend at least 1 foot (30.48 centimeters) horizontally beyond the outline of the container in all directions.

(a) The vertical extension of the vacuum jacket required for service connections shall be allowed to extend above grade.

3-1.9 Containers installed in an area subject to flooding, high water table, or other buoyant forces shall be safeguarded from movement by anchoring or other means acceptable to the department based on the best interests of public health, safety, and welfare and the environment.

3-1.10 Where a liquefied H_2 container is installed on ground that is level with or lower than the adjacent storage of all classes of flammable and combustible liquid or liquid oxygen, suitable protective means shall be taken to prevent accumulation of liquids within 50 feet (15.2 meters) of the liquefied H_2 container. Protective means shall include diking, diversion curbs, or grading of the flammable and combustible liquid storage or liquid oxygen storage.

3-1.11 Aboveground liquefied H_2 systems shall be fenced and posted to prevent entrance by unauthorized personnel.

Exception: Liquefied H_2 dispensers may be located outside the fence.

3-1.12 Underground installations shall be deemed to provide engineered protection from overhead power lines.

3-1.13 Venting of underground containers. Venting systems for underground storage containers shall be in accordance with CGA G-5.5, adopted by reference in section 8.

History: 2008 AACS.

R 29.7098 Specific requirements.

Rule 98. Sections 3-2.1, 3-2.4 and table 3-2.1 are reproduced from NFPA 50B, and sections 3-2.2, 3-2.2.1, 3-2.3, 3-2.5 to 3-2.8 and table 3-2.2 of the storage and handling of gaseous and Liquefied H_2 code are added as follows:

3-2 Specific requirements.

3-2.1 The location of liquefied hydrogen storage, as determined by the maximum total quantity of liquefied hydrogen, shall be in the order of preference indicated by the Roman numerals in table 3-2.1.

Table 3-2.1 Preferred Locations of Liquefied Hydrogen Systems

Nature of Location	Size of Hydrogen Storage			
	39.63 gal to 50 gal (150 L to 189.25 L)	51 gal to 300 gal (193.03 L to 1135.5 L)	301 gal to 600 gal (1139.29 L to 2271 L)	In excess of 600 gal (2271 L)
Outdoors	I	I	I	I
In a separate building	II	II	II	Not permitted
In a special room	III	III	Not permitted	Not permitted
Inside buildings Not in a special room or exposed to other occupancies	IV	Not permitted	Not permitted	Not permitted

3-2.2 The minimum distance in feet from liquefied H_2 systems of indicated storage capacity located either outdoors, in a separate building, or in a special room to any specified exposure shall be in accordance with table 3-2.2.

Exception: The distances in numbers 1, 4, 6, 7, 8, and 11 in table 3-2.2 may be reduced by 2/3, but not to less than 5 feet (1.5 meters), for insulated portions of the systems. For uninsulated portions of the system, the distances may be reduced by the use of protective structures having a minimum fire resistance rating of 2 hours. The protective structure or the insulated liquefied H_2 container shall interrupt the line of sight between uninsulated portions of the liquefied H_2 storage system and the exposure.

(a) An aboveground H_2 storage container system shall be erected per table 3-2.2 but not less than 75 feet (22.9 meters) from any of the following:

(i) A school.

(ii) A church.

(iii) A hospital.

(iv) A theater.

(v) Assembly occupancy for 50 or more persons.

Exception: The restrictions in section 3-2.2(a) shall not apply to an aboveground H_2 system used exclusively for stationary power generation.

3-2.2.1 Loose or piled combustible materials and weeds and long dried grass shall not be permitted within 10 feet (3.1 meters) of any system.

Table 3-2.2 Minimum Distance from Liquefied Hydrogen Systems to Exposures

Type of Exposure	Total Liquefied H_2 Storage		
	39.63 gal to 3,500 gal (ft)	3,501 gal to 15,000 gal (ft)	15,001 gal to 75,000 gal (ft)
1. Building or structure (a) Wall(s) adjacent to system constructed of non-combustible or limited-combustible materials (1) Sprinklered building or structure or unsprinklered building or structure having noncombustible contents	5[a]	5[a]	5[a]
(2) Unsprinklered building or structure with combustible contents. Adjacent wall(s) with fire resistance rating less than 3 hours[b]	25	50	75
Adjacent wall(s) with fire resistance rating of 3 hours or greater[b]	5	5	5
(b) Wall(s) adjacent to system constructed of combustible materials (1) Sprinklered building or structure	50	50	50
(2) Unsprinklered building or structure	50	75	100
2. Wall openings (a) Openable	75	75	75
(b) Unopenable	25	50	50
3. Air compressor intakes or inlets for air-conditioning or ventilating equipment	75	75	75
4. All classes of flammable and combustible liquid containers (above ground, and vent or fill openings if below ground) *(see 3-1.3)*[c]	50	75	100
5. Between stationary liquefied H_2 containers	5	5	5
6. Flammable gas storage other than H_2	50	75	75
7. Liquid oxygen storage and other oxidizers *(see 3-1.3)*	75	75	75
8. Combustible solids	50	75	100
9. Open flames and welding	50	50	50
10. Places of public assembly for 50 or more persons	75	75	75
11. Public ways, railroads, and property lines	25	50	75
12. Inlet to underground sewers	10	10	10
13. Places of public assembly less than 50 people	25	50	50
14. Flammable/Combustible liquid dispenser other than H_2	10	10	10
For SI units: 1 ft = 0.305 m; 1 gal = 3.785 L.			

a Portions of wall less than 10 ft (3 m) (measured horizontally) from any part of a system shall have a fire resistance rating of at least 1/2 hour.

b Exclusive of windows and doors.

c Distances can be reduced to 15 ft (4.6 m) for class IIIB combustible liquids.

3-2.3 Cargo transport unloading. Unloading connections on delivery equipment shall not be positioned closer to any of the exposures cited in table 3-2.2 than the distances given for the storage system. The following shall apply:

(a) For stationary container system installations or stationary multiple container systems utilizing a common or manifolded transfer line, or railroad tank car transfer systems to fill trucks with no stationary storage involved shall comply with all of the following:

(i) Owners and operators shall ensure that fixed piping is used between the container and master shutoff and check valves. The piping and manifolds shall be secured to the container frame. Flexible hoses are permitted between the check valve and the cargo vehicle unloading connection.

Exception: Bulkheads will be located at a minimum of 1.5 feet (45.72 centimeters) when crash protection is provided at 10 feet (3.1 meters) from storage container.

(ii) Emergency shutoff valves required in this section shall be tested annually for proper operation. The results of the tests shall be documented.

(iii) All installations shall have at least 1 clearly identified and easily accessible manually operated remote emergency shutoff device. Within 1 year after the effective date of these rules, existing installations shall have at least 1 clearly identified and easily accessible manually operated remote emergency shutoff device. The emergency shutoff device shall be located not less than 20 feet (6.1 meters) nor more than 100 feet (30.5 meters) in the path of egress from the emergency shutoff valve and not less than 20 feet (6.1 meters) from the container system.

(iv) During transfer of H_2 to and from cargo vehicles, the hand or emergency brake of the vehicle shall be set, and chock blocks shall be used to prevent rolling of the vehicle.

(v) Transfer systems shall be capable of depressurizing to facilitate disconnection. Bleed connections shall lead to a safe point of discharge.

(vi) Cargo vehicle shall be equipped with air-brake interlock in front of the unloading connection to protect against drive-away.

(b) The delivery vehicle shall be located so that all parts of the vehicle are on the premises when delivery is made, and shall comply with all of the following:

(i) Vent connections shall be provided so that loading arms and hoses can be depressurized and vented prior to disconnection if necessary. The connections for liquefied H_2 shall be piped to a vent stack in accordance with part 2, section 2-2.2.

(ii) When transfers are made into fueling facility containers, the liquefied H_2 shall be transferred at a pressure that shall not over-pressurize the receiving container.

(iii) The transfer piping shall be equipped with a check valve to prevent backflow from the container being filled to the transport vehicle. Check valve shall be located as close as practicable to the container.

(iv) If the fueling facility container or transfer equipment is located in a remote area relative to the delivery vehicle operating status indicators, that is those that indicate container level, these container status indicators shall be provided in the unloading area.

(v) At least 1 qualified person shall be in continuous attendance and shall have an unobstructed view of the transfer point while unloading is in progress.

(vi) Sources of ignition shall not be permitted in the unloading area while transfer is in progress.

(vii) The cargo transport vehicle's engine shall be shut off while the transfer hose or piping is being connected or disconnected. If required for liquefied H_2 trailer pumping transfer, the engine pump drive motor may be started and used during the liquid transfer operations.

3-2.4 The minimum distance of container fill connections from parked vehicles shall be 25 ft (7.6 m).

3-2.5 An owner and operator shall ensure that a container systems are properly designed and constructed in accordance with the ASME and that any portion, which is underground, mounded, or partially underground, is protected from corrosion by either of the following:

(a) The ASME approved container system is cathodically protected by all the following requirements:

(i) The ASME approved container system is coated with a suitable dielectric material approved by the department.

(ii) Factory-installed or field-installed cathodic protection systems are designed by a corrosion expert or in accordance with the NACE recommended practice RP0285 entitled "Corrosion Control of Underground Storage Tank Systems by Cathodic Protection" or impressed current systems are designed to allow a determination of current operating status as required in section 5.4-1 of the H_2 code.

(iii) Cathodic protection systems are operated and maintained in accordance with the provisions of section 5.4-1 of the H_2 code.

(b) Other methods as approved by the department and in the best interest of public health, safety, and welfare, and the environment.

3-2.6 Out-of-service aboveground containers.

3-2.6.1 Containers that are no longer in service for a period of 12 months shall be closed. To close the aboveground container, the owner or operator shall empty the container, purge it with an inert gas and safeguard it against tampering. Piping that is removed from service shall be purged with an inert gas and capped or removed.

3-2.6.2 Each container that is to be reused at the original location or a new location shall be purged with an inert gas and be in compliance with all the requirements for the installation of a new container, and shall be recertified by the manufacturer, or authorized representative, and tested in accordance with the container's design specifications or be pressure tested with an inert gas or H_2 at 1.1 times the MOP for not less than 10 minutes. Piping that is to be reused shall be in compliance with all the requirements for the installation of new piping and shall be tested in compliance with section 3-2.8 of this code prior to being brought back into service.

3-2.7 Out-of-service underground, mounded, and partially buried containers.

3-2.7.1 Containers that are no longer used to store H_2 and are not intended to be brought back into service shall be permanently closed. To permanently close the container, the container shall be emptied and purged with an inert gas to render the container free of H_2, and then the container shall be removed from the ground. When a structure above or near the container prevents removal, the container shall be emptied and purged with an inert gas to render the container free of H_2, then the container shall be filled with an inert solid

material. Piping that is permanently removed from service shall be purged with an inert gas and capped or removed.
3-2.7.2 Containers may be rendered temporarily out-of-service only when it is intended they be brought back into service at a later date. To temporarily close a container, all of the following requirements shall be met:
(a) The container shall be emptied and purged with an inert gas.
(b) Corrosion protection for the container and all underground piping shall be maintained in compliance with section 5-4.1 of this code.
(c) The vent line shall remain functional.
(d) The container shall be secured against tampering.
(e) Piping that is temporarily removed from service shall be purged with an inert gas and capped.
3-2.7.2.1 Each container that is temporarily out-of-service greater than 12 months shall be pressure tested with an inert gas at 1.1 times the MOP for not less than 10 minutes prior to being brought back into service. Temporarily out-of-service piping shall be tested in compliance with section
3-2.8 of this code prior to being brought back into service.
3-2.8 Testing. After installation, prior to being placed into service, all container connections, piping, tubing, hose, and hose assemblies shall be tested by an approved method as outlined in ASME B31.3 "Process Piping," adopted by reference in section 8, or by a method acceptable to the department based on the best interest of public health, safety, and welfare, and the environment.

History: 2008 AACS.

R 29.7099 Handling of liquefied H_2 inside buildings other than separate buildings and special rooms.

Rule 99. Sections 3-3 and 3-3.1 of the storage and handling of gaseous and Liquefied H_2 code are added as follows:
3-3 Handling of liquefied H_2 inside buildings other than separate buildings and special rooms.
3-3.1 Portable liquefied H_2 containers of 50-gallons (189-Liters) or less capacity as permitted in Table 3-2.1 and in compliance with section 3-1.5 where housed inside buildings not located in a special room and exposed to other occupancies shall comply with the following minimum requirements.
(a) Containers shall be located 20 feet (6.1 meters) from all classes of flammable and combustible liquids and readily combustible materials such as excelsior or paper.
(b) Containers shall be located 15 feet (4.6 meters) from ordinary electrical equipment, and 25 feet (7.6 meters) from open flames, welding or other sources on ignition.
(c) Containers shall be located 50 feet (15 meters) from storage of oxidizing gases.
(d) Containers shall be protected against damage or injury due to falling objects or work activity in the area.
(e) Containers shall be firmly secured and stored in an upright position and protected against damage in accordance with the provisions of section 2-1.7.
(f) Pressure relief devices on the containers shall be vented directly outdoors or to a hood that is suitable for flammable and combustible vapors.

History: 2008 AACS.

R 29.7100 Location of dispensing operations and equipment.

Rule 100. Sections 3-4 to 3-4.4 of the storage and handling of gaseous and Liquefied H_2 code are added as follows:

3-4 Location of dispensing operations and equipment.

3-4.1 Dispensing equipment located outdoors shall be in accordance with the following:

(a) Dispensing equipment shall be allowed under weather protection in accordance with the requirements of section 4-5 and constructed in a manner that prevents the accumulation of H_2 gas.

3-4.2 Dispensing equipment shall not be beneath electric power lines or where exposed by their failure, and shall be a minimum of 10 feet (3.1 meters) from the nearest important building or property line or 20 feet (6.2 meters) from any activity that involves a fixed source of ignition.

3-4.3 Dispensing equipment shall be located so that all parts of the vehicle being served are on the premises of the motor fuel dispensing facility.

3-4.4 Dispensing equipment shall be protected against collision damage by means acceptable to the department. Dispensing devices shall be securely bolted in place. Dispensing devices shall be installed in accordance with manufacturer's instructions.

History: 2008 AACS.

R 29.7101 Installation of emergency shutdown equipment.

Rule 101. Sections 3-5 to 3-5.2 of the storage and handling of gaseous and Liquefied H_2 code are added as follows:

3-5 Installation of emergency shutdown equipment.

3-5.1 Breakaway protection shall be provided in a manner such that, if a pullaway event occurs, liquefied H_2 will cease to flow at any separation.

3-5.2 A breakaway device shall be installed at every dispensing point. Such a device shall be arranged to separate by a force not greater than 150 pounds (75 kilograms), when applied in any direction that the vehicle would move. Breakaway devices shall be compatible with a standard acceptable to the department.

History: 2008 AACS.

Chapter 4 Design considerations at specific locations

R 29.7102 Outdoor locations.

Rule 102. Sections 4-1 to 4-1.4 are reproduced from NFPA 50B as follows:

4-1 Outdoor locations.

4-1.1 Roadways and yard surfaces located below liquefied hydrogen piping as well as areas under the fill connections and delivery vehicle's uninsulated hydrogen piping from which

liquid air can drip shall be constructed of noncombustible materials. For the purposes of this standard, asphaltic and bitumastic paving shall be considered combustible. If expansion joints are used, fillers also shall be of noncombustible materials.
4-1.2 If walls, roofs, weather shelters, or canopies are provided, they shall be constructed of noncombustible or limited-combustible materials.
4-1.3 Electrical wiring and equipment shall comply with section 2-7.
4-1.4 Lighting shall be provided for nighttime transfer operation.

History: 2008 AACS.

R 29.7103 Specific requirements.

Rule 103. Sections 4-2 to 4-2.2.3 of the storage and handling of gaseous and Liquefied H_2 code are added as follows:
4-2 Specific requirements.
4-2.1 The location of liquefied H_2 storage, as determined by the maximum total quantity of liquefied H_2, shall be in accordance with table 3-2.1.
4-2.2 Installation of liquefied H_2 inside buildings other than detached buildings and gas rooms.
4-2.2.1 More than 1 system of 50 gallons (189.5 liters) or less capacity may be installed in the same room or area outside of special rooms located as allowed in table 3-2.1 and in compliance with section 4-2.1, provided the systems are separated by at least 50 feet (50.2 meters) or by a full height fire-resistive partition having a minimum fire resistance rating of 2 hours is located between the systems.
4-2.2.2 The separation distance between multiple systems of 50 gallons (189.5 liters) or less may be reduced to 25 feet (7.6 meters) in buildings where the space between storage areas is free of combustible materials and protected with a sprinkler system.
4-2.2.3 When sprinkler protection is provided, the area in which the H_2 is stored or used shall be protected with a sprinkler system designed to be not less than that required by NFPA 13 for extra hazard group 1 with a minimum design area of 2,500 square feet (762 square meters).

History: 2008 AACS.

R 29.7104 Separate buildings.

Rule 104. Sections 4-3 to 4-3.5 of the storage and handling of gaseous and Liquefied H_2 code are added as follows:
4-3 Separate buildings.
4-3.1 Separate buildings containing more than 300 gallons (1137 liters) of liquefied H_2 shall be constructed of noncombustible or limited-combustible materials on a substantial frame. Walls and roofs shall be lightly fastened. All venting elements shall be designed to relieve at a maximum pressure of
25 pounds/square foot. Doors shall be located in such a manner that they are readily accessible to personnel in an emergency. Exception: Window glazing may be of plastic.
Exception: Explosion venting shall be in accordance with section 4-4.3.

4-3.2 Ventilation to the outdoors shall be provided. Inlet openings shall be located within 18 inches (45.72 centimeters) of the floor in exterior walls only. Outlet openings shall be located at the high point of the room in exterior walls or roof. Both the inlet and outlet vent openings shall have a minimum total area of 1 square foot/1000 cubic foot (0.3 square meters/305 cubic meters) of room volume. Discharge from outlet openings shall be directed or conducted to a location that allows for dissipation of the exhaust air in the ambient surroundings away from air intakes and occupied spaces.
4-3.3 There shall be no sources of ignition within the room or area where the H_2 system is installed.
4-3.4 Electrical wiring and equipment shall comply with section 2-7.
Exception: All electrical wiring and equipment in the separate building shall be class I, division 2, group B.
4-3.5 Heating, if provided, shall be by indirect means such as steam or hot water.
Exception: Electrical heating shall be in accordance with section 4-3.4.

History: 2008 AACS.

R 29.7105 Special rooms.

Rule 105. Sections 4-4 to 4-4.9.1, and table 4-4.9 of the storage and handling of gaseous and Liquefied H_2 code are added as follows:
4-4 Special rooms.
4-4.1 Floors, walls, and ceiling shall be constructed of noncombustible or limited-combustible materials. Interior walls or partitions shall have a fire resistance rating of at least 2 hours, shall be continuous from floor to ceiling, and shall be securely anchored. At least 1 wall shall be an exterior wall. Windows and doors shall be located so as to be readily accessible in case of emergency.
Exception: Window glazing may be of plastic.
4-4.1.1 Access from within the primary structure shall be made through 1 vapor-sealing, 2 hour, self-closing fire door.
4-4.2 Ventilation shall be provided as in section 4-4.3.
4-4.3 Deflagration venting shall be provided in exterior walls or roof only.
4-4.3.1 Vents shall be any 1 or any combination of the following:
(a) Walls of light material.
(b) Lightly fastened hatch covers.
(c) Lightly fastened, outward opening doors in exterior walls.
(d) Lightly fastened walls or roof.
(e) Other methods in accordance with NFPA 69, adopted by reference in section 8.
4-4.3.2 Where applicable, snow loads shall be considered.
4-4.3.3 The venting area shall be equal to not less than 1 cubic foot/30 cubic feet (1 cubic meter/9 cubic meters) of room volume.
4-4.4 There shall be no sources of ignition.
4-4.5 Electrical wiring and equipment shall comply with section 2-7, except that all electrical wiring and equipment in the special room shall be class I, division 2, group B.
4-4.6 Heating, if provided, shall be by steam, hot water, or other indirect means.
Exception: Electrical heating shall be in accordance with section 4-4.5.
4-4.7 Room ventilation.

4-4.7.1 The ventilation shall be at least 1 cubic foot/minute/square foot of room area, but not less than 1 cubic foot/minute/12 cubic feet of room volume and shall be designed such that an accumulation of H_2 at a concentration equal to or greater than 25% of the lower flammable limit shall not occur in any part of the room.
4-4.7.2 Ventilation shall be by a continuous mechanical ventilation system or by a mechanical ventilation system activated by a continuously monitoring H_2 detection system where a gas concentration of not more than 25% of the lower flammable limit is present.
4-4.7.3 Where installed, a gas detection system shall be equipped to sound an alarm and visually indicate when a maximum of 25% of the lower flammable limit is reached.
4-4.7.4 Any failure of the ventilation system shall immediately shut down the fueling system and provide notification to the system operator. Reactivation of the fueling system shall be by manual restart and shall be conducted by trained personnel.
4-4.7.5 The gas detection system shall function during ventilation system maintenance operations.
4-4.7.6 A ventilation system for a room within or attached to another building shall be designed to ensure that all areas serviced by the ventilation system meeting performance requirements in accordance with section 4-4.7 during the normal operating conditions and during alarm conditions.
4-4.8 Warning signs.
4-4.8.1 Access doors shall have warning signs with the words "WARNING - NO SMOKING - NONORDORIZED FLAMMABLE GAS - CRYOGENIC LIQUID - COLD GAS - NO OPEN FLAMES." The wording shall be in plainly legible, bright red letters not less than 1 inch (2.54 centimeters) high on a white background.
4-4.9 Indoor attended gaseous H_2 fast-fill fueling.
4-4.9.1 Attended indoor fast-fill fueling system shall be in accordance with subsections (a) to (k) of this section.

(a) Gas storage equipment shall be located outdoors unless approved by the department. Gas processing and compression equipment shall be listed or approved for indoor use or located outdoors.

(b) An emergency manual shutdown device shall be located in the dispensing area not less than 20 feet (6.1 meters) and not more than 100 feet (30.5 meters) in the path of egress from the dispensing area. Actuation of the emergency manual shutdown device shall perform in accordance with subsection (h) of this section.

(c) The dispenser shall be equipped with a gas detection system which shall actuate in accordance with subsection (h) of this section when a maximum of 25% of LFL is detected (1% H_2 in air).

(d) The dispenser shall be equipped with a leak detection system capable of identifying a leak from the dispensing system outside the dispenser housing by conducting a pre-fill pressure test. The leak detection must be capable of detecting a minimum leak rate of 1.9 gallon/minute (7.2 liter/minute) and shall actuate in accordance with subsection (h) of this section when a leak is detected.

(e) Whether the fill is communicated or non-communicated, the dispensing system must be listed, labeled or approved to insure that the fills are protective of the safety of the temperature, pressure and flow rate limits of the on-board fuel system during fueling.

(f) The dispensing area shall be equipped with a fire detection system and shall actuate in accordance with subsection (i) of this section if a fire is detected.

(g) A ventilation system shall be installed for the dispensing area. The ventilation system shall be capable of delivering ventilation air as provided in section 4.3.7. The ventilation system shall operate prior to dispenser operation, during fueling, and for at least 1 minute after fueling has been completed. The ventilation flow rate shall be monitored. Failure or reduction of the ventilation flow rate below the required flow rate shall shut down the dispensing system.

Exemption: A dispensing area ventilation system is not required when the fuel delivery per refueling event is less than those listed in table 4-4.9.

Table 4-4.9

Room Size (m3)	Maximum fuel delivery per refueling event that does not require room ventilation (kg)
1000	0.8
2000	1.7
3000	2.5
4000	3.3
5000	4.2

(h) The actuation of any 1 of the systems listed in subsections (b) to (g) of this section shall shut down the dispenser, stop the flow of gas into the room, and start or continue to run the ventilation system, if required, it shall be in accordance with table 4-4.9.

(1) Reactivation of the dispenser and gas flow into the room shall be by manual restart and shall be conducted by trained personnel.

(i) Interior walls, doors, and window openings within 15 feet (4.6 meters) of the dispenser shall be constructed of materials having a fire rating of at least 2 hours. Wall penetrations shall require use of listed fire-rated equipment.

(j) The owner/operator shall not allow hot work/open flames within 15 feet (4.6 meters) of the refueling location unless the dispenser is shut down, depressurized, and purged.

(k) If H_2 is to be removed from the vehicle storage system, H_2 shall be discharged into a closed transfer system or vented outdoors in accordance with CGA G-5.5, "Hydrogen Vent Systems," as adopted by reference in section 8.

History: 2008 AACS.

R 29.7106 Canopies.

Rule 106. Sections 4-5 to 4-5.2 of the storage and handling of gaseous and Liquefied H_2 code are added as follows:

4-5 Canopies.

4-5.1 A container installation that has a canopy or roof shall have prior approval by the department based on the best interests of public health, safety, and welfare and the environment. This canopy or roof shall not limit the dissipation of heat or dispersion of flammable vapors and cannot restrict firefighting access and control.

4-5.2 A roof or canopy shall meet all of the following conditions:

(a) The lowest elevation of the roof or canopy shall not be less than 4 feet (1.8 meters) from the top of the container.

(b) All container vent(s) are extended through the roof or canopy.

(c) The roof or canopy is constructed in such a way that it will not allow for vapors to accumulate under the canopy or roof.
(d) Constructed of non-combustible materials.

History: 2008 AACS.

R 29.7107 Outdoor fill station.

Rule 107. Sections 4-6 to 4-6.2 of the storage and handling of gaseous and Liquefied H_2 code are added as follows:

4-6 Outdoor fill station.

4-6.1 Each line between a liquid storage facility and a dispenser at a fill station shall have a valve that closes when 1 of the following occurs:

(4) The power supply to the dispenser is cut off.

(5) Any emergency shutdown device at the refueling station is activated.

4-6.2 A manual shutoff valve shall be provided at a fill station upstream of the breakaway device specified in section 3-5, where it is readily accessible to the person dispensing H_2, unless 1 of the following occurs:

(a) The self-closing valve referred to in section 4-6.1 is located immediately upstream of the dispenser.

(b) The dispenser is equipped with a self-closing valve that closes each time the dispenser is turned to the off position or when an emergency device is activated.

4-6.3 The liquid hydrogen dispenser shall provide a means to safely vent all hydrogen that may become trapped in sections of the dispenser between closed valves in all shut down modes including loss of power.

History: 2008 AACS.

Chapter 5 Operation

R 29.7108 Operation.

Rule 108. Section 5-1 is reproduced from NFPA 50B, and sections 5-1.1 to 5-1.9 of the storage and handling of gaseous and Liquefied H_2 code are added as follows:

5-1 Operation. For installations that require any operation of equipment by the user, instructions shall be maintained at operating locations.

5-1.1 Where an overpressure incident that results in operation of the overpressure protection system of the dispenser occurs, the dispenser pressure control system shall be examined and certified by a qualified operator prior to being returned to service.

5-1.2 Liquefied H_2 fueling facilities shall be designed so that, in the event of a power failure, the system shall go into fail-safe condition.

5-1.3 The maximum delivery pressure at the vehicle tank inlet shall not exceed the maximum allowable pressure of the vehicle fuel tanks.

5-1.4 Hose and arms shall be equipped with a shutoff valve at the fuel end and a breakaway device that meets the requirements of section 3-5 to minimize release of liquid and vapor

in the event that a vehicle pulls away while the hose remains connected. Such a device shall be installed and maintained in accordance with the manufacturer's instructions.
5-1.5 When not in use, hose shall be secured to protect it from damage.
5-1.6 Where a hose or arm of nominal 3 inches (7.62 centimeters) diameter or larger is used for liquid transfer or where 1 of nominal 4 inches (10.16 centimeters) diameter or larger is used for vapor transfer, an emergency shutoff valve shall be installed in the piping of the transfer system within 10 feet (3.1 meters) from the nearest end of the hose or arm.
5-1.6.1 Where either a liquid or vapor line has 2 or more legs, an emergency shutoff valve shall be installed either in each leg or in the line before the legs.
5-1.7 Bleed or vent connections shall be provided so that loading arms and hose can be drained and depressurized prior to disconnection, if necessary. These bleed or vent connections shall lead to a safe point of discharge.
5-1.8 A fueling connector and mating vehicle receptacle shall be used for reliable, safe, and secure transfer of liquefied or gaseous H_2 to or from the vehicle with minimal leakage.
5-1.8.1 The fueling connector either shall be equipped with an interlock device that prevents release while the line is open or shall have self-closing ends that automatically close upon disconnection.
5-1.9 The transfer of liquefied H_2 into vehicular onboard fuel supply containers shall be performed in accordance with the manufacturer's instructions. The dispenser manufacturer's instructions shall be posted at the dispensing device.

History: 2008 AACS.

R 29.7109 Maintenance.

Rule 109. Sections 5-2 to 5-2.11 of the storage and handling of gaseous and Liquefied H_2 code are added as follows:
5-2 Maintenance.
5-2.1 Hoses, nozzles, and breakaways shall be examined visually to ensure that they are safe for use and shall be maintained in accordance with manufacturer's instructions on at least a quarterly basis, or if required by the manufacturer.
5-2.2 Hose shall be tested for leaks per manufacturer's requirements, and any leakage shall be a reason for rejection and replacement.
5-2.3 Testing shall be carried out with helium or with helium/ H_2 blend as the test gas or if this is not possible, with H_2 using suitable precautions.
5-2.4 The facility operator shall maintain a maintenance log in good condition and accessible to department inspection. Records shall be maintained for a minimum of 2 years.
5-2.5 Controllers on fuel stations shall be designed to verify the integrity of the fuel hose, breakaway, nozzle, and receptacle by pressurizing these components to at least the vehicle back pressure and checking pressure drop prior to the start of fueling.
5-2.6 Containers and their appurtenances, piping systems, compression equipment, controls, and detection devices shall be maintained in operating condition and according to manufacturer's instructions.
5-2.7 Pressure relief valves shall be maintained in operating condition.
5-2.8 Maintenance personnel shall be trained in leak detection procedures.
5-2.9 Area within 10 feet (3.1 meters) of dispenser shall be free from debris, weeds and other material that present a fire hazard.

5-2.10 Safety, gas detection, and fire protection equipment shall be tested or inspected at intervals not to exceed 6 months.
5-2.11 Maintenance activities on fire control equipment shall be scheduled so that a minimum of equipment is taken out of service at any 1 time and fire prevention safety is not compromised.

History: 2008 AACS.

R 29.7110 Cathodic protection maintenance.

Rule 110. Sections 5-3 and 5-3.1 of the storage and handling of gaseous and Liquefied H_2 code are added as follows:
5-3 Cathodic protection maintenance.
5-3.1(a) Owners and operators shall ensure that all metallic container systems that are underground, mounded, or partially underground are protected and maintained to minimize corrosion as cited in the NACE standard RP0169 entitled "Recommended Practice, Control of External Corrosion of Underground or Submerged Metallic Piping Systems" and NACE recommended practice RP0285 entitled "Corrosion Control of Underground Storage Tank Systems by Cathodic Protection," adopted by reference in section 8.

(b) All corrosion protection systems shall be operated and maintained to continuously provide corrosion protection to the metal components of the portion of the ASME approved container system that routinely contains liquid H_2 and that is in contact with the ground.

(c) All container systems equipped with cathodic protection systems shall be inspected for proper operation by a NACE certified cathodic protection tester as defined in section 1-3. The H_2 system shall be tested within 6 months of installation and at least once each calendar year at intervals not to exceed 15 months.

(d) Container systems equipped with impressed current cathodic protection systems shall be inspected by the owner every 60 days to ensure that the equipment is operating within design specifications. The design limits shall be readily available.

(e) If container systems are equipped with cathodic protection, then the owner or operator shall maintain records to demonstrate that the cathodic protection is in compliance with the performance standards of this section.
The records shall provide both of the following:

(i) The results of the last 3 inspections required in subsection (d) of this section.

(ii) The results of testing from the last 2 inspections required in subsection (c) of this section.

(f) Within 6 months following the repair of any cathodically protected container system, where the repairs may affect the operation of the cathodic protection system, the system shall be tested in accordance with subsections (c) and (d) of this section to ensure that it is operating properly.

(g) Repairs or replacement of a cathodic protection system shall be conducted by a NACE certified corrosion expert as defined in section 1-3. General system maintenance of the cathodic protection system including, but not limited to, replacement of fuses, and splicing of cable would not be required to be designed by a corrosion expert and shall be approved by the department to not increase the hazard to public health, safety, and welfare and the environment.

History: 2008 AACS.

R 29.7111 Stray or impressed currents and bonding.

Rule 111. Sections 5-4 to 5-4.3 of the storage and handling of gaseous and Liquefied H_2 code are added as follows:

5-4 Stray or impressed currents and bonding.

5-4.1 Where stray or impressed currents are used or can be present on dispensing systems, such as cathodic protection, protective measures to prevent ignition shall be taken.

5-4.2 Static protection between the fuel dispenser and the vehicle shall not be required where H_2 is transferred by conductive hose, flexible metallic tubing, or pipe connections where both halves of the metallic couplings are in continuous contact.

5-4.3 The transfer surface shall be concrete or shall have a resistivity not exceeding API RP 2003, "Protection Against Ignitions Arising Out of Static, Lightning, and Stray Currents," adopted by reference in section 8, performance criteria of 1 megohm as measured using a method acceptable to the department, such as EN 1081:1998 "Resilient Floor Coverings - Determination of the Electrical Resistance," adopted by reference in section 8.

History: 2008 AACS.

R 29.7112 Emergency plan.

Rule 112. Sections 5-5 to 5-5.1.2 of the storage and handling of gaseous and Liquefied H_2 code are added as follows:

5-5 Emergency plan.

5-5.1 Emergency plan requirements.

5-5.1.1 An emergency plan shall be prepared and updated wherever gaseous or liquefied H_2 are produced, handled, stored, or used.

5-5.1.2 The plan shall be available to the department for inspection upon reasonable notice and shall include all of the following information:

(a) The type of emergency equipment available and its location.

(b) A brief description of any testing or maintenance programs for the available emergency equipment.

(c) An indication that hazard identification labeling is provided for each storage area.

(d) Location of posted emergency procedures.

(e) A material safety data sheet (MSDS or equivalent) that is available for the gaseous or liquefied H_2 stored or used on the site.

(f) A list of personnel or a site operating authority who are designated and trained to be liaison personnel for the fire department and who are responsible for but shall not be limited to the following:

(i) Aiding the emergency responders in pre-emergency planning.

(ii) Identifying the location of the gaseous and liquefied H_2 stored or used.

(iii) Accessing material safety data sheets.

(iv) Knowledge of the site emergency procedures.

(g) A list of types and quantities of gaseous and liquefied H_2 found within the facility.

History: 2008 AACS.

R 29.7113 Release of H_2.

Rule 113. Sections 5-6 to 5-6.2 of the storage and handling of gaseous and Liquefied H_2 code are added as follows:

5-6 Release of H_2.

5-6.1 Records of unexpected discharges. Accurate records of the unexpected discharge of gaseous or liquefied H_2 shall be kept by the facility and made readily available upon request. Records shall be kept for a minimum of 2 years.

5-6.2 Container failure. When an unexpected discharge due to primary container failure is discovered the department and the local fire department, shall be immediately notified, and the container shall be repaired or be removed from service.

History: 2008 AACS.

R 29.7114 Security.

Rule 114. Sections 5-7 and 5-7.1 of the storage and handling of gaseous and Liquefied H_2 code are added as follows:

5-7 Security.

5-7.1 Liquid H_2 and compressed gas cylinders, containers, and systems shall be secured against accidental dislodgement and against access by unauthorized personnel.

History: 2008 AACS.

R 29.7115 Leaks, damage, or corrosion.

Rule 115. Sections 5-8 and 5-8.1 of the storage and handling of gaseous and Liquefied H_2 code are added as follows:

5-8 Leaks, damage, or corrosion.

5-8.1 Leaking, damaged, or corroded, liquid or gaseous H_2 systems shall be removed from service, replaced or repaired.

History: 2008 AACS.

Chapter 6 Fire protection

R 29.7116 Cautionary information.

Rule 116. Sections 6-1 to 6-1.2 of the storage and handling of gaseous and Liquefied H_2 code are added as follows:

6-1 Cautionary information.

6-1.1 Hazard identification signs shall be conspicuously placed at all locations where H_2 is produced, stored, used, or handled.

6-1.2 Ratings shall be assigned in accordance with NFPA 704, "Standard System for the Identification of the Hazards of Materials for Emergency Response," adopted by reference in section 8.

History: 2008 AACS.

R 29.7117 Signs.

Rule 117. Sections 6-2 to 6-2.3 of the storage and handling of gaseous and Liquefied H_2 code are added as follows:

6-2.1 Signs prohibiting smoking or open flames within 25 feet (7.6 meters) shall be provided where H_2 is produced, stored, or used.

6-2.2 A sign with the following legends printed in red capital letters on a white background shall be conspicuously posted as follows:"NON-ODORIZED FLAMMABLE GAS - CRYOGENIC LIQUID or COLD GAS - NO SMOKING - NO OPEN FLAMES" All lettering on signage shall be 3 inches (7.62 centimeters) or more.

Exception: This does not apply to motor vehicle dispensing per sections
7.2.13 and 4-4.8.1.

6-2.3 Identification signs. Visible hazard identification signs shall be provided in accordance with NFPA 704, "Standard System for the Identification of the Hazards of Materials for Emergency Response", adopted by reference in section 8.1.1, at entrances to buildings or areas in which liquefied H_2 is stored, handled or used.

History: 2008 AACS.

R 29.7118 Fire extinguisher.

Rule 118. Section 6-3 of the storage and handling of gaseous and Liquefied H_2 code is added as follows:6-3 A portable fire extinguisher(s) having a rating of not less than 40-B:C or 2-20-B:C shall be located within 75 feet (22.9 meters) from the pumps, dispensers, and container fill openings. Fire extinguishers shall be inspected and maintained according to NFPA 10, "Standard for Portable Fire Extinguishers," adopted by reference in section 8-1.1.

History: 2008 AACS.

R 29.7119 Sprinkler protection.

Rule 119. Section 6-4 of the storage and handling of gaseous and Liquefied H_2 code is added as follows:

6-4 When sprinkler protection is provided, the area in which H_2 is stored or used shall be protected with an automatic sprinkler system designed to be not less than that required by NFPA 13, "Standard for the Installation of Sprinkler Systems," adopted by reference in section 8.

History: 2008 AACS.

Chapter 7 Liquefied hydrogen dispensing systems

R 29.7120 System component qualification.

Rule 120. Section 7-1 of the storage and handling of gaseous and Liquefied H_2 code is added as follows:

7-1 System component qualification. System components shall comply with applicable provisions of Chapters 2 and 3 of this part.

History: 2008 AACS.

R 29.7121 General system requirements.

Rule 121. Sections 7-2 to 7-2.15 of the storage and handling of gaseous and Liquefied H_2 code are added as follows:

7-2 General system requirements.

7-2.1 All fuel dispensing facilities shall meet the provisions of this chapter.

7-2.2 Compression, processing, generation, storage, and dispensing equipment shall be protected to prevent damage from vehicles and minimize the possibilities of physical damage and vandalism and meet the requirements of section 2-1.5 and section 3-4.4.

7-2.2.1 Access to liquefied H_2 storage, compression, and processing equipment by members of the public shall be restricted by a suitable secure area.

7-2.3 Control devices shall be installed so that internal or external icing does not cause vehicle or fueling station malfunction.

7-2.4 Vehicles shall not be considered a source of ignition with respect to the provisions of this chapter.

Exception: Vehicles containing fuel-fired equipment, such as recreational vehicles and catering trucks, shall be considered a source of ignition unless this equipment is shut off completely before entering an area in which ignition sources are not permitted.

7-2.5 The fueling connection shall prevent the escape of H_2 where the connector is not properly engaged or becomes separated.

7-2.6 Fueling nozzles for H_2 service shall be in accordance with section 2-14.1.

7-2.7 Compression and processing equipment shall be designed for use with H_2 and for maximum pressures and temperatures to which it can be subjected under normal operating conditions.

7-2.8 Compression and processing equipment shall have pressure relief devices that limit each stage pressure to the maximum allowable working pressure for the compression cylinder and piping associated with that stage of compression and meets the requirements of chapter 2.

7-2.9 H_2 compression equipment shall be equipped with appropriate automatic shutdown controls.

7-2.10 Control circuits that shut down, shall remain down until manually activated or reset by qualified personnel.

7-2.11 A hazard analysis shall be conducted on every H_2 fueling system installation by a qualified engineer(s) with proven expertise in H_2 fueling systems and installations.

7-2.11.1 The hazard analysis shall include the following: fire protection measures, fire protection and suppression systems, detection systems, and ventilation.
7-2.11.2 At a minimum, the hazard analysis shall include consideration of potential failures in hoses, nozzles, dispensing equipment, as well as failures for maintenance and service.
7-2.11.3 Method used for hazard analysis shall be 1 or combination of several of the following recognized procedures: hazard and operability studies (HAZOPs), failure mode effects and criticality analysis (FMECA), preliminary hazards analysis (PHA), fault tree analysis (FTA) and event tree analysis (ETA). Other analysis methods, when used, shall ensure same level of system safety as provided by any of the recognized procedures or acceptable to the department based on the best interest of public health, safety, and welfare, and the environment.
7-2.11.4 Standard designs that have been analyzed by recognized procedure need not be studied each and every time such installation occurs. Site-specific elements that are unique to the installation shall be reviewed in concert with the analysis performed on the standard system to ensure that the standard design has not been altered in a way that would negatively affect the hazard analysis.
7-2.11.5 These hazard analyses shall be available for review at final inspection, prior to the installation being placed into service, shall be maintained on site, and be available to the department upon request.
7-2.12 Dispensing systems shall be equipped with overfill protection.
7-2.13 Warning signs shall be conspicuously posted in the dispensing area and shall incorporate the following or equivalent wording: "Stop Motor, No Smoking, Non-Odorized Flammable Gas, Cryogenic Liquid or Cold Gas. Remain in attendance outside of the vehicle and in view of the nozzle. No filling of portable containers in or on a motor vehicle."
7-2.14 Each outdoor H_2-dispensing device shall be located not less than 10 feet (3.1 meters) from property lines, openings to buildings, and buildings of combustible wall construction. A dispensing device shall not be less than 20 feet (6.1 meters) from any activity that involves a fixed source of ignition. In addition, a dispenser shall not be placed beneath a power line.
7-2.15 Each container filling location that is open to the public shall have an attendant or supervisor on duty who meets the requirements of section 1-8 of the rules.

History: 2008 AACS.

R 29.7122 Operational requirements for full-service liquefied H_2 motor fuel dispensing facilities.

Rule 122. Sections 7-3 to 7-3.2 of the storage and handling of gaseous and Liquefied H_2 code are added as follows:
7-3 Operational requirements for full-service liquefied H_2 motor fuel dispensing facilities.
7-3.1 Each motor fuel dispensing facility shall have an attendant or supervisor on duty whenever the facility is open for business. The attendant or supervisor shall dispense liquefied H_2 into fuel tanks of motor vehicles or into portable containers.
7-3.2 The provisions of section 2-1 of this part shall not prohibit the temporary use of a portable storage container in conjunction with the dispensing of liquefied H_2 into a container of a motor vehicle or other motorized equipment which is on the premises and

which is not accessible to the public. A portable storage container installation shall only be made with the approval of the department and comply with all the requirements of section 2-13.

History: 2008 AACS.

R 29.7123 Operational requirements for attended self-service motor fuel dispensing facilities.

Rule 123. Sections 7-4 to 7-4.5 of the storage and handling of gaseous and Liquefied H_2 code are added as follows:

7-4 Operating requirements for attended self-service motor fuel dispensing facilities.

7-4.1 Self-service motor fuel dispensing facility shall mean that portion of a property where liquefied H_2 used as motor fuel is stored and dispensed from fixed, approved dispensing equipment into the fuel containers of motor vehicles by persons other than the facility attendant and shall also include, where provided, facilities for sale of other retail products.

7-4.2 There shall be not less than 1 attendant on duty while the self-service facility is open for business. The attendant's primary function shall be to supervise, observe, and control the dispensing of liquefied H_2 while the liquefied H_2 is actually being dispensed.

7-4.3 The responsibility of the attendant shall be as follows:

(a) Prevent the dispensing of liquefied H_2 into portable containers in or on a motor vehicle.

(b) Control sources of ignition.

(c) Immediately activate emergency controls and notify the fire department of any fire. The attendant or supervisor on duty shall be mentally and physically capable of performing the functions and assuming the responsibility prescribed in section 7-4.

7-4.4 Operating instructions shall be conspicuously posted in the dispensing area.

7-4.5 The dispensing area shall at all times be in clear view of the attendant, and the placing or allowing of any obstacle to come between the dispensing area and the attendant control area is prohibited. This may be achieved by cameras or mirrors, or both. The attendant shall at all times be able to communicate with persons in the dispensing area.

History: 2008 AACS.

R 29.7124 Operational requirements for unattended self-service motor fuel dispensing facilities.

Rule 124. Sections 7-5 to 7-5.5 of the storage and handling of gaseous and Liquefied H_2 code are added as follows:

7-5 Operating requirements for unattended self-service motor fuel dispensing facilities.

7-5.1 Unattended self-service shall be permitted subject to the approval of the department based on the best interests of public health, safety, and welfare and the environment. Users shall use a key, card, or other method which is unique to each user, and which is provided by the facility operator, and shall be properly trained in dispensing operations. The owner shall verify such training to the department upon request.

7-5.2 At least 1 emergency shutoff device specified in section 7-6 shall be provided, and shall be reset only by the owner or an owner's authorized agent.

7-5.3 Operating instructions shall be conspicuously posted in the dispensing area. The instructions shall include the location of emergency controls.
7-5.4 In addition to the warning signs specified in section 6-2, emergency instructions shall be conspicuously posted in the dispenser area. The instructions shall incorporate the following or equivalent wording: "Emergency Instructions In Case of Fire:
(1) Use emergency stop button.
(2) Report accident by calling the local fire number. Report location."
7-5.5 A telephone or other approved, clearly identified means to notify the fire department shall be provided on the site in a location approved by the department.

History: 2008 AACS.

R 29.7125 Emergency shutoff devices.

Rule 125. Sections 7-6 and 7-6.1 of the storage and handling of gaseous and Liquefied H_2 code are added as follows:
7-6 Emergency shutoff devices.
7-6.1 Liquefied H_2 dispensing systems shall be provided with 1 or more clearly identified emergency shutoff devices or electrical disconnects at the dispensing area. Such devices or disconnects shall be installed in approved locations but not less than 10 feet (3.1 meters) and not more than 100 feet (30.5 meters) away from the dispensing area and which is along the means of egress. Emergency shutoff devices or electrical disconnects shall disconnect power and fuel supply to all dispensing devices, to all remote pumps serving the dispensing devices, and to all associated power. When more than 1 emergency shutoff device or electrical disconnect is provided, all devices shall be interconnected. Resetting an emergency shutoff shall require manual intervention and the manner of resetting shall be approved by the department.

History: 2008 AACS.

R 29.7126 Refueling from transport vehicles.

Rule 126. Sections 7-7 to 7-7.11 of the storage and handling of gaseous and Liquefied H_2 code are added as follows:
7-7 Refueling from transport vehicles. The dispensing of liquefied H_2 in the open from a transport vehicle to a motor vehicle located at commercial, industrial, governmental, or manufacturing establishments and intended for fueling vehicles used in connection with their businesses shall be permitted if all of the requirements of sections 7-7.1 to 7-7.11 have been met.
7-7.1 The department shall be notified before commencing operations under section 7-7.
7-7.2 The transport vehicle shall comply with U.S. DOT requirements for the transportation of liquefied H_2.
7-7.3 Nighttime deliveries shall only be made in an area considered to be adequately lighted.
7-7.4 The transport vehicle flasher lights shall be in operation while dispensing operations are in progress.

7-7.5 Smoking materials, including matches, lighters, and other sources of ignition, including torches, shall not be used within 20 feet (6.1 meters) of the dispensing of liquefied H_2 in the open from a transport vehicle to a motor vehicle.
7-7.6 Each area where dispensing of liquefied H_2 in the open from a transport vehicle to a motor vehicle shall be provided with 1 or more listed fire extinguishers that have a minimum capability of 40-B:C. The fire extinguishers shall be readily accessible to the dispensing operation. Fire extinguishers shall be inspected and maintained under NFPA 10, "Standard for Portable Fire Extinguishers," adopted by reference in section 8.
7-7.7 Mobile fueling shall take place aboveground, shall not be beneath electric power lines or where exposed by their failure, and shall be 10 feet (3.1 meters) from the nearest important building, property lines or combustible storage.
7-7.8 Transport vehicle brakes shall be set and chock blocks shall be in place.
7-7.9 Persons performing dispensing operations shall be qualified to deliver and dispense H_2 fuels. Operations of transport vehicles used for mobile fueling operations shall have access on-site or be in possession of an emergency communications device to notify the proper authorities if there is an emergency.
7-7.10 The transport vehicles shall be positioned with respect to vehicles being fueled to prevent traffic from driving over the delivery hose and between the transport vehicle and motor vehicle being fueled. The dispensing hose shall be properly placed on an approved reel or in an approved compartment before moving the transport vehicle.
7-7.11 The transfer area shall meet the requirements of section 5-4.

History: 2008 AACS.

Chapter 8 Referenced publications

R 29.7127 Referenced publications.

Rule 127. Sections 8-1 to 8-1.2.9 of the storage and handling of gaseous and Liquefied H_2 code are added as follows:
8-1 The following documents or portions thereof are referenced within this standard as mandatory requirements and shall be considered part of the requirements of this standard. The edition indicated for each referenced mandatory document is the current edition, and cost at time of adoption of these rules. Copies of the adopted publications are available for inspection at the office of the Department of Environmental Quality, Waste and Hazardous Materials Division, Storage Tank Unit, P.O. Box 30241, Lansing, Michigan 48909-7741.
8-1.1 NFPA Publications. National Fire Protection Association, 1 Batterymarch Park, P.O. Box 9101, Quincy, Massachusetts 02269-9101.
NFPA 10, "Standard for Portable Fire Extinguishers," 2002 edition, $36.50.
NFPA 13, "Standard for the Installation of Sprinkler Systems," 2002 edition, $70.00.
NFPA 69, "Standard on Explosion Prevention Systems," 2002 edition, $33.50.
NFPA 70, "National Electrical Code," 2005 edition, $75.00.
NFPA 220, "Standard on Types of Building Construction," 1999 edition, $28.00.
NFPA 704, "Standard System for the Identification of the Hazards of Materials for Emergency Response," 2001 edition, $33.50.
8-1.2 Other Publications.

8-1.2.1 ASME Publications. American Society of Mechanical Engineers, Three Park Avenue, New York, New York 10016-5990.
ANSI/ASME B31.3, "Process Piping," 2004 edition, $240.00.
ASME International, "Boiler and Pressure Vessel Code," Section VIII, 2004 edition, $525.00.
8-1.2.2 ASTM Publication. American Society for Testing and Materials, 100 Barr Harbor Drive, West Conshohocken, Pennsylvania 19428-2959.
ASTM E136-04, "Standard Test Methods for Behavior of Materials in a Vertical Tube Furnace at 750 Degrees C," 2004 edition, $35.00.
8-1.2.3 CGA Publications. Compressed Gas Association, 1725 Jefferson Davis Highway, Arlington Virginia 22202-4100.
CGA S-1.1, "Pressure Relief Device Standards - Part 1 - Cylinders for Compressed Gases," 2002 edition, $196.00.
CGA S-1.2, "Pressure Relief Device Standards - Part 2 - Cargo and Portable Tanks for Compressed Gases," 1995 edition, $145.00.
CGA S-1.3, "Pressure Relief Device Standards - Part 3 - Stationary Storage Containers for Compressed Gases," 2003 edition, $145.00.
CGA G-5.5, "Hydrogen Vent Systems," 2004 edition, $39.00.
ANSI/CGA C-4, "Method of Marking Portable Compressed Gas Containers to Identify the Material Contained," 2003 edition, $252.00.
CGA C-7, "Guide to the Preparation of Precautionary Labeling and Marking of Compressed Gas Containers," 2000 edition, $268.00.
8-1.2.4 IAS Publications. International Approval Services, 8501 East Pleasant Valley Road, Cleveland, Ohio 44131.
ANSI/IAS NGV 4.4, "Breakaway Devices for Dispensing Systems," 1999 edition, $57.00.
8-1.2.5 NACE Publications. National Association of Corrosion Engineers International, 1440 South Creek Drive, Houston, Texas 77084.
NACE RP0169, "Control of External Corrosion of Underground or Submerged Metallic Piping Systems," 2002 edition, $42.00.
NACE RP0285, "Corrosion Control of Underground Storage Tank Systems by Cathodic Protection," 2002 edition, $37.00.
8-1.2.6 International Codes Council. 4051 West Flossmore Road, Country Club Hills, Illinois 60478-5795.
"International Fire Code," 2006 edition, section 2209.3.2.6, $61.50.
8-1.2.7 U.S. Government Publications. U.S. Government Printing Office,
Washington, DC 20402.
Title 49, Code of Federal Regulations, Parts 171-190, U.S. Department of Transportation Specifications and Regulations.
8-1.2.8 ECS Publications. European Committee for Standardization, Central Secretariat: rue de Stassart 36, B-1050, Brussels.
EN 1081, "Resilient Floor Coverings, Determination of the Electrical Resistance," 1998 edition, $32.00.
8-1.2.9 API Publications. American Petroleum Institute, 1220 L Street, Northwest, Washington, DC, 20005-5-4070.
API Recommended Practice 2003, "Protection Against Ignitions Arising Out of Static, Lightning, and Stray Currents," 7th edition, $111.00.

History: 2008 AACS.