DEPARTMENT OF CONSUMER AND INDUSTRY SERVICES

DIRECTOR'S OFFICE

OCCUPATIONAL HEALTH STANDARDS

(By authority conferred on the director of the department of consumer and industry services by sections 14 and 24 of 1974 PA 154 and Executive Reorganization Orders Nos. 1996-1 and 1996-2, MCL 408.1014, 408.1024, 330.3101, and 445.2001)

PART 525. GRINDING, POLISHING, AND BUFFING OPERATIONS

R 325.52501 Scope.

Rule 1. (1) These rules prescribe the use of exhaust hood enclosures and systems in removing dust, dirt, fumes, and gases generated through the grinding, polishing, or buffing of ferrous and nonferrous metals.

(2) These rules replace OH rule 3215.

History: 2003 AACS.

R 325.52502 Definitions.

Rule 2. (1) "Abrasive cutting-off wheels" means organic-bonded wheels, the thickness of which is not more than one forty-eighth of their diameter for those up to, and including, 20 inches in diameter, and not more than one-sixtieth of their diameter for those larger than 20 inches in diameter, used for operations such as cutting, cutting off, grooving, slotting, coping, and jointing. The wheels may be any of the following:

(a) "Solid" consisting of organic-bonded abrasive material throughout.

(b) "Steel centered" consisting of a steel disc with a rim of organic-bonded material molded around the periphery.

(c) "Inserted tooth" consisting of a steel disc with organic-bonded abrasive teeth or inserts mechanically secured around the periphery.

(2) "Belts" means all power-driven, flexible, coated bands used for grinding, polishing, or buffing purposes.

(3) "Branch pipe" means the part of an exhaust system piping that is connected directly to the hood or enclosure.

(4) "Cradle" means a movable fixture, upon which the part to be ground or polished is placed.

(5) "Disc wheels" means all power-driven rotatable discs faced with abrasive materials, artificial or natural, and used for grinding or polishing on the side of the assembled disc.

(6) "Entry loss" means the loss in static pressure caused by air flowing into a duct or hood. It is generally expressed in inches of water gauge.

(7) "Exhaust system" means a system consisting of branch pipes connected to hoods or enclosures, 1 or more header pipes, an exhaust fan, means for separating solid contaminants from the air flowing in the system, and a discharge stack to outside.

(8) "Grinding wheels" means all power-driven rotatable grinding or abrasive wheels, except disc wheels as defined in this standard, consisting of abrasive particles held together by artificial or natural bonds and used for peripheral grinding.

(9) "Header pipe (main pipe)" means a pipe into which 1 or more branch pipes enter and which connects such branch pipes to the remainder of the exhaust system.

(10) "Hoods and enclosures" means the partial or complete enclosure around the wheel or disc through which air enters an exhaust system during operation.

(11) "Horizontal double-spindle disc grinder" means a grinding machine carrying 2 power-driven, rotatable, coaxial, horizontal spindles upon the inside ends of which are mounted abrasive disc wheels used for grinding 2 surfaces simultaneously.

(12) "Horizontal single-spindle disc grinder" means a grinding machine carrying an abrasive disc wheel upon 1 or both ends of a power-driven, rotatable single horizontal spindle.

(13) "Polishing and buffing wheels" means all power-driven rotatable wheels composed all or in part of textile fabrics, wood, felt, leather, paper, and may be coated with abrasives on the periphery of the wheel for purposes of polishing, buffing, and light grinding.

(14) "Portable grinder" means any power-driven rotatable grinding, polishing, or buffing wheel mounted in such manner that it may be manually manipulated.

(15) "Scratch-brush wheels" means all power-driven rotatable wheels made from wire or bristles and used for scratch cleaning and brushing purposes.

(16) "Swing-frame grinder" means any power-driven rotatable grinding, polishing, or buffing wheel mounted in such a manner that the wheel with its supporting framework can be manipulated over stationary objects.

(17) "Velocity pressure (vp)" means the kinetic pressure in the direction of flow necessary to cause a fluid at rest to flow at a given velocity. It is generally expressed in inches of water gauge.

(18) "Vertical-spindle disc grinder" means a grinding machine having a vertical, rotatable power-driven spindle carrying a horizontal abrasive disc wheel.

History: 2003 AACS.

R 325.52503 Application.

Rule 3. (1) An employer shall provide suitable hood or enclosures that are connected to exhaust systems for every establishment performing dry grinding, dry polishing, or buffing.

(2) Exhaust systems shall be operated continuously whenever operations are carried on, and shall be capable of preventing contaminants from entering the breathing zone of employees.

History: 2003 AACS.

R 325.52504 Hood and branch pipe requirements.

Rule 4. (1) An employer shall ensure that hoods connected to exhaust systems be used, and hoods shall be designed, located, and placed so that dust or dirt particles shall fall or be projected into the hoods in the direction of the airflow. Wheels, discs, straps or belts shall not be operated in such manner and in such direction as to cause the dust and dirt particles to be thrown into the operator's breathing zone.

(2) Grinding wheels on floor stands, pedestals, benches, and special-purpose grinding machines and abrasive cutting-off wheels shall have not less than the minimum exhaust volumes specified in Table G-4 with a recommended minimum duct velocity of 4,500 feet per minute in the branch and 3,500 feet per minute in the main. The entry losses from all hoods, except the vertical-spindle disc grinder hood, shall equal 0.65 velocity pressure for a straight takeoff and 0.45 velocity pressure for a tapered takeoff. The entry loss for the vertical-spindle disc grinder hood is in Figure G-1. If any wheel is wider than wheel diameters shown in Table G-4, then the exhaust volume shall be increased by the ratio of the new width to the width shown.

Example: If wheel width = 4 1/2 inches, then 4.5 ÷ 4 x 610 = 686 (rounded to 690).

Table G-4
Grinding and Abrasive Cutting-off Wheels

Wheel Diameter (inches)	Wheel Width (inches)	Minimum Exhaust Volume ($feet^3$/min.)
To 9	1 1/2	220
Over 9 to 16	2	390
Over 16 to 19	3	500
Over 19 to 24	4	610
Over 24 to 30	5	880
Over 30 to 36	6	1,200

(3) Scratch-brush wheels and all buffing and polishing wheels mounted on floor stands, pedestals, benches, or special-purpose machines shall have not less than the minimum exhaust volume specified in Table G-5.

Table G-5
Buffing and Polishing Wheels

Wheel Diameter (inches)	Wheel Width (inches)	Minimum Exhaust Volume ($feet^3$/min.)
To 9	2	300
Over 9 to 16	3	500
Over 16 to 19	4	610
Over 19 to 24	5	740
Over 24 to 30	6	1,040
Over 30 to 36	6	1,200

(4) Grinding wheels or discs for horizontal single-spindle disc grinders shall be hooded to collect the dust or dirt generated by the grinding operation and the hoods shall be connected to branch pipes having exhaust volumes as specified in Table G-6.

Table G-6
Horizontal Single-Spindle Disc Grinder

Disc Diameter (inches)	Exhaust Volume (feet^3/min.)
Up to 12	220
Over 12 to 19	390
Over 19 to 30	610
Over 30 to 36	880

(5) Grinding wheels or discs for horizontal double-spindle disc grinders shall have a hood enclosing the grinding chamber. The hood shall be connected to 1 or more branch pipes having exhaust volumes as specified in
Table G-7.

Table G-7
Horizontal Double-Spindle Disc Grinder

Disc Diameter (inches)	Exhaust Volume (feet^3/min.)
Up to 19	610
Over 19 to 25	880
Over 25 to 30	1,200
Over 30 to 53	1,770
Over 53 to 72	6,280

(6) Grinding wheels or discs for vertical single-spindle disc grinders shall be encircled with hoods to remove the dust generated in the operation. The hoods shall be connected to 1 or more branch pipes having exhaust volumes as specified in Table G-8.

Table G-8
Vertical Spindle Disc Grinder

Disc Diameter (inches)	One-half or more of disc covered		Disc not covered	
	Number [1]	Exhaust (ft.^{3}/min)	Number[1]	Exhaust (ft.^{3}/min)
Up to 20	1	500	2	780
Over 20 to 30	2	780	2	1,480

Over 30 to 53	2	1,770	4	3,530
Over 53 to 72	2	3,140	5	6,010

1Number of exhaust outlets around periphery of hood, or equal distribution provided by other means.

(7) Grinding and polishing belts shall be provided with hoods to remove dust and dirt generated in the operations and the hoods shall be connected to branch pipes having exhaust volumes as specified in Table G-9.

Table G-9
Grinding and Polishing Belts

Belts Width (inches)	Exhaust Volume ($feet^3$/min.)
Up to 3	220
Over 3 to 5	300
Over 5 to 7	390
Over 7 to 9	500
Over 9 to 11	610
Over 11 to 13	740

(8) Cradles and swing-frame grinders. If cradles are used for handling the parts to be ground, polished, or buffed, requiring large partial enclosures to house the complete operation, then a minimum average air velocity of 150 feet per minute shall be maintained over the entire opening of the enclosure. Swing-frame grinders shall be exhausted in the same manner as provided for cradles. (See Fig. G-3).

(9) If the work is outside the hood, then air volumes shall be increased as shown in American Standard Fundamentals Governing the Design and Operation of Local Exhaust Systems, Z9.2-1960 (section 4, exhaust hoods). ANSI Z9.2-1960 is adopted by reference in this rule. Printed copies of ANSI Z9.2-1960 are available from Global Engineering Documents, 15 Inverness Way East, Englewood, Colorado 80112, telephone number 1-800-854-7179, website: www.global.ihs.com, at a cost as of the time of adoption of these rules of $27.00 or is available for inspection at the Michigan Department of Consumer and Industry Services, Standards Division, 7150 Harris Drive, P.O. Box 30643, Lansing, Michigan 48909.

History: 2003 AACS.

R 325.52505 Exhaust systems.

Rule 5. (1) An employer shall ensure that exhaust systems for grinding, polishing, and buffing operations be designed in compliance with American Standard Fundamentals Governing the Design and Operation of Local Exhaust Systems, Z9.2-1960.

(2) Exhaust systems for grinding, polishing, and buffing operations shall be tested as specified in American Standard Fundamentals Governing the Design and Operation of Local Exhaust Systems, Z9.2?1960.

(3) All exhaust systems shall be provided with suitable dust collectors.

History: 2003 AACS.

R 325.52506 Hood and enclosure design.

Rule 6. (1) It is the dual function of grinding and abrasive cutting-off wheel hoods to protect the operator from the hazards of bursting wheels and to provide a means for the removal of dust and dirt generated. All hoods
shall be not less in structural strength than specified in the American National Standard Safety Code for the Use, Care, and Protection of Abrasive Wheels, B7.1-1970. ANSI B7.1-1970 is adopted by reference in this rule. Printed copies of ANSI B7.1-1970 are available from Global Engineering Documents, 15 Inverness Way East, Englewood, Colorado 80112, telephone number 1-800-854-7179, website: www.global.ihs.com, at a cost as of the time of adoption of these rules of $45.00 or is available for inspection at the Michigan Department of Consumer and Industry Services, Standards Division, 7150 Harris Drive, P.O. Box 30643, Lansing, Michigan 48909.

(2) Due to the variety of work and types of grinding machines employed, hoods shall adapt to the particular machine in question, and such hoods shall be located as close as possible to the operation.

(3) Exhaust hoods for floor stands, pedestals, and bench grinders shall be designed in accordance with Figure G-2. The adjustable tongue shown in the figure shall be kept in working order and shall be adjusted within one-fourth inch of the wheel periphery at all times.

(4) Swing-frame grinders shall be provided with exhaust booths as indicated in Figure G-3.

(5) Portable grinding operations, whenever the nature of the work permits, shall be conducted within a partial enclosure. The opening in the enclosure shall not be larger than is actually required in the operation and an average face air velocity of not less than 200 feet per minute shall be maintained.

(6) Hoods for polishing and buffing and scratch-brush wheels shall be constructed to conform as closely to Figure G-4 as the nature of the work will permit.

(7) Cradle grinding and polishing operations shall be performed with a partial enclosure similar to Figure G-5. The operator shall be positioned outside the working face of the opening of the enclosure. The face opening of the enclosure should not be greater in area than that required for the performance of the operation, and the average air velocity into the working face of the enclosure shall not be less than 150 feet per minute.

(8) Hoods for horizontal single-spindle disc grinders shall be constructed to conform as closely as possible to the hood shown in Figure G-6. There shall be a space between the back of the wheel and the hood, and a space around the periphery of the wheel of at least 1 inch to permit the suction to act around the wheel periphery. The opening on the side of the disc shall not be larger than is required for the grinding operation, but shall not be less than twice the area of the branch outlet.

(9) Horizontal double-spindle disc grinders shall have a hood encircling the wheels and grinding chamber similar to that illustrated in Figure G-7. The openings for passing the work into the grinding chamber should be kept as small as possible, but shall not be less than twice the area of the branch outlets.

(10) Vertical-spindle disc grinders shall be encircled with a hood constructed so that the heavy dust is drawn off a surface of the disc and the lighter dust exhausted through a continuous slot at the top of the hood as shown in Figure G-1.

(11) Grinding and polishing belt hoods shall be constructed as close to the operation as possible. The hood should extend almost to the belt, and 1-inch openings should be provided on either side. Figure G-8 shows a typical hood for a belt operation.R 325.52506 Tables and Charts.

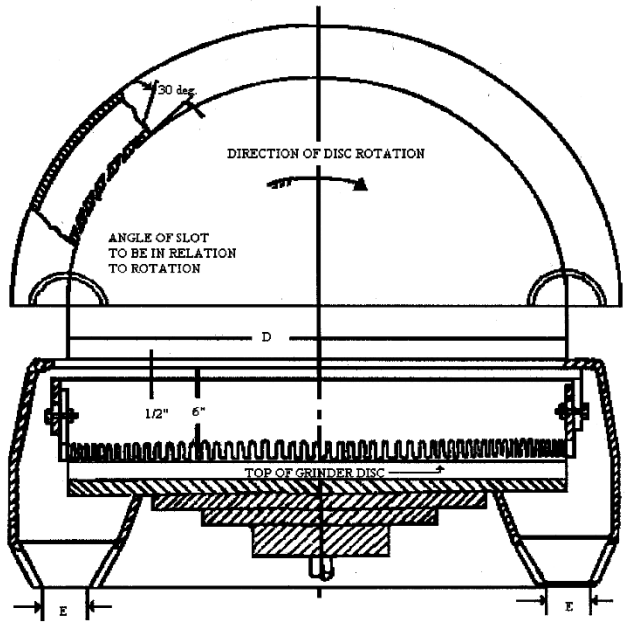

Figure G-1
Vertical Spindle Disc Grinder Exhaust Hood and Branch Pipe Connections

Diameter D. Inches		Exhaust E		Volume Exhausted at 4,500 ft/min ft^3/min	Note
Min.	Max.	No. Pipes	Diameter		
	20	1	4 ¼	500	When one-half or more of the disc can be hooded, use exhaust ducts as shown at the left.
Over 20	30	2	4	780	
Over 30	72	2	6	1,770	
Over 53	72	2	8	3,140	
	20	2	4	780	When no hood can be used over disc, use exhaust ducts as shown at left.
Over 20	20	2	4	780	
Over 30	30	2	5 ½	1,480	
Over 53	53	4	6	3,530	
	72	5	7	6,010	

Entry loss = 1.0 slot velocity pressure + 0.5 branch velocity pressure.
Minimum slot velocity = 2,000 ft/min - 1/2 inch slot width.

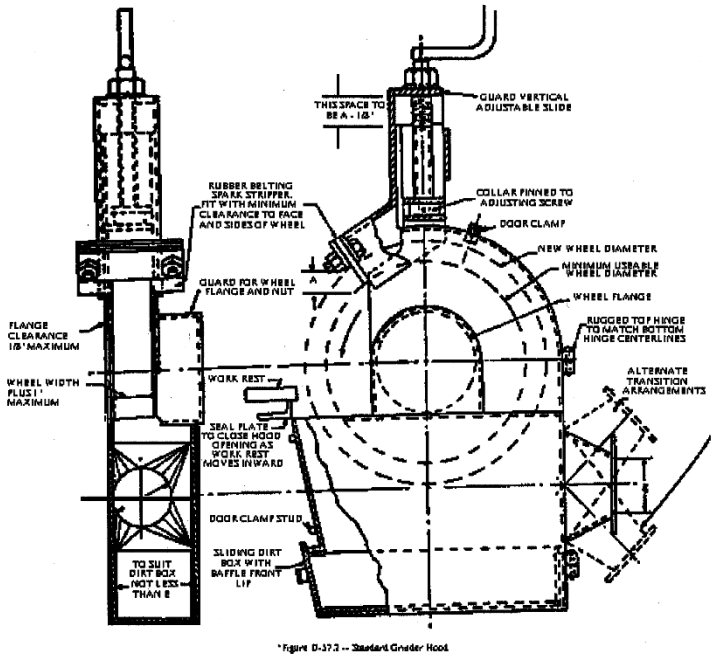

*Figure D-37.2 -- Standard Grinder Hood

Figure G-2
Standard Grinder Hood

Wheel Dimension, Inches			Exhaust Outlet, Inches E	Volume of Air at 4,500 ft/min
Diameter		Width, Maximum		
Minimum = d	Maximum = D			
	9	1 ½	3	220
Over 9	16	2	4	390
Over 16	19	3	4 1/2	500
Over 19	24	4	5	610
Over 24	30	5	6	880
Over 30	36	6	7	1,200

Entry loss = 0.45 velocity pressure for tapered takeoff;
0.65 velocity pressure for straight takeoff.

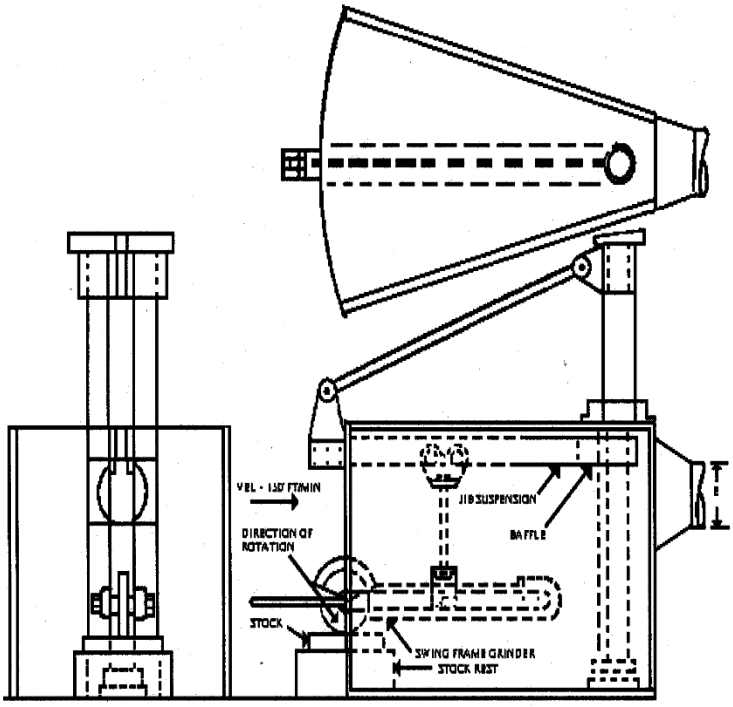

Figure G-3
A Method of Applying an Exhaust Enclosure to Swing-Frame Grinders
Note: Baffle to reduce front opening as much as possible.

4

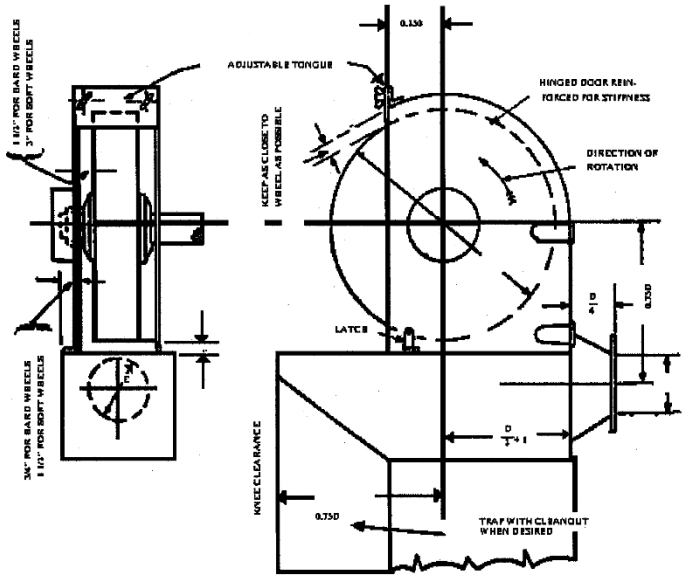

Figure G-4
Standard Buffing and Polishing Hood

Wheel Dimension, Inches			Exhaust Outlet, Inches E	Volume of Air at 4,500 ft/min
Diameter		Width Max		
Min = d	Max = D			
	9	2	3 1/2	300
Over 9	16	3	4	500
Over 16	19	4	5	610
Over 19	24	5	5 1/2	740
Over 24	30	6	6 1/2	1,040
Over 30	36	6	7	1,200

Entry loss = 0.15 velocity pressure for tapered takeoff;
0.65 velocity pressure for straight takeoff.

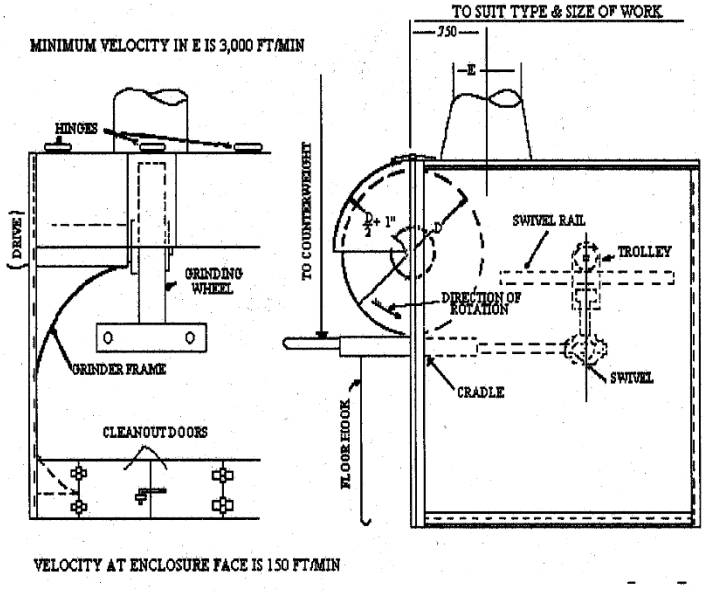

Figure G-5
Cradle Polishing or Grinding Enclosure
Entry loss = 0.45 velocity pressure for tapered takeoff.

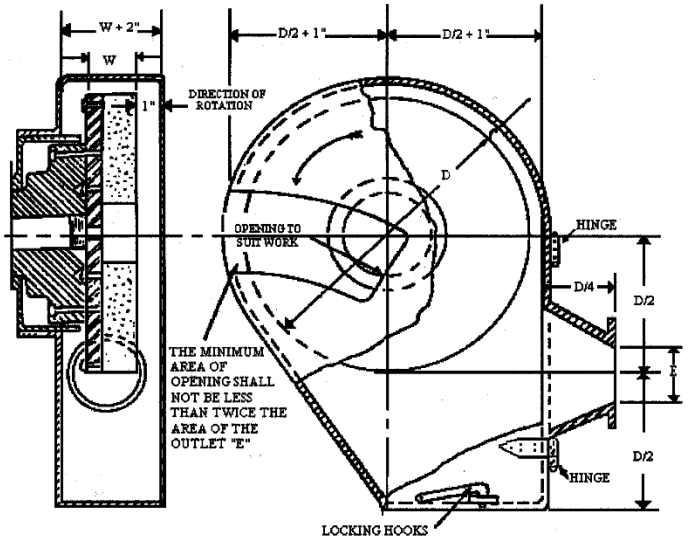

Figure G-6
Horizontal Single-Spindle Disc Grinder Exhaust Hood and Branch Pipe Connections

Diameter D, Inches		Exhaust E Dia. Inches	Volume Exhausted at 4,500 ft/min ft^3/min
Min.	Max.		
	12	3	220
Over 12	19	4	390
Over 19	30	5	610
Over 30	36	6	880

NOTE: If grinding wheels are used for disc grinding purposes, hoods must conform to structural strength and materials as described in 9.1.
Entry loss = 0.45 velocity pressure for tapered takeoff.

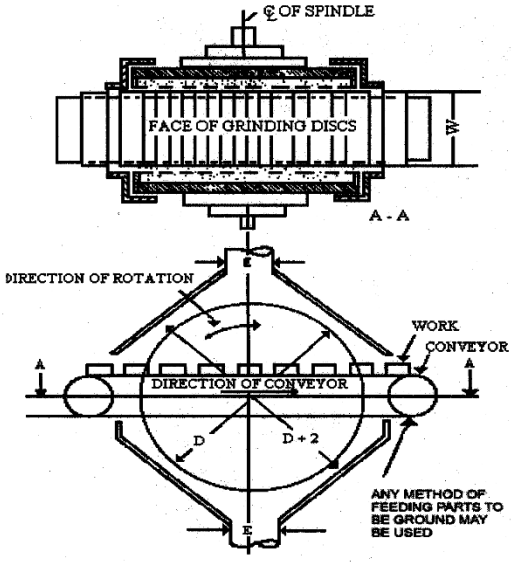

Figure G-7
Horizontal Double-Spindle Disc Grinder Exhaust Hood and Branch Pipe Connections

Disc Diameter Inches		Exhaust E		Volume Exhausted at 4,500 ft/min ft^3/min	Note
Min.	Max.	No. Pipes	Dia.		
	19	1	5	610	When width "W" permits, exhaust ducts should be as near heaviest grinding as possible.
Over 19	25	1	6	880	
Over 25	30	1	7	1,200	
Over 30	53	2	6	1,770	
Over 53	72	4	8	6,280	

Entry loss = 0.45 velocity pressure for tapered takeoff.

8

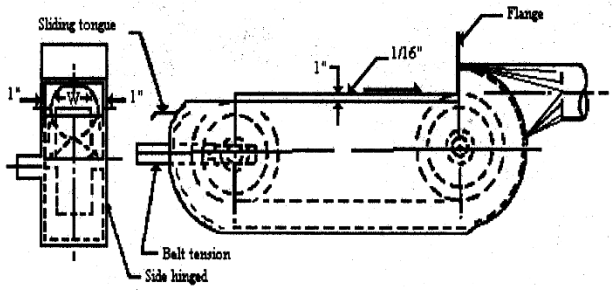

Figure G-8
A Typical Hood for a Belt Operation

Belt Width W. Inches	Exhaust Volume, ft^3/min
Up to 3	220
3 to 5	300
5 to 7	390
7 to 9	500
9 to 11	610
11 to 13	740

Minimum duct velocity = 4,500 ft/min branch, 3,500 ft/min main.
Entry loss = 0.45 velocity pressure for tapered takeoff;
0.65 velocity pressure for straight takeoff.

History: 2003 AACS.