DEPARTMENT OF LICENSING AND REGULATORY AFFAIRS

DIRECTOR'S OFFICE

GENERAL INDUSTRY SAFETY AND HEALTH STANDARD

(By authority conferred on the Director of the Department of Licensing and Regulatory Affairs by sections 16 and 21 of 1974 PA 154, and Executive Reorganization Order Nos. 1996-2, 2003-18, 2003-1, 2008-4, and 2011-4, MCL 408.1016, 408.1021, 445.2001, 445.2011, 445.2025, and 445.2030)

PART 58. AERIAL WORK PLATFORMS

R 408.15801 Scope.

Rule 5801. (1) This standard applies to the construction, operation, maintenance, and inspection of aerial work platforms with either manual or powered mobility. These rules do not apply to construction operations as defined by 1974 PA 154, MCL 408.1001 to MCL 408.1094.

(2) Fire fighting equipment are not included in these rules, but are provided for in General Industry Safety Standard Part 74 "Fire Fighting," as referenced in R 408.15812.

(3) Powered industrial trucks are not included in these rules, but are provided for in General Industry Safety and Health Standard Part 21 "Powered Industrial Trucks," as referenced in R 408.15812.

History: 1979 AC; 2008 AACS; 2018 AACS.

R 408.15802 Equipment covered.

Rule 5802. These rules apply to equipment that has a primary function of elevating personnel, together with their tools and necessary materials, on a platform, which is mechanically positioned. The units covered are described by the following American National Standards Institute Standards:

(a) ANSI standard A92.2 2001 edition, "Vehicle-Mounted Elevating and Rotating Aerial Devices," which is adopted by reference in R 408.15810. This standard applies to vehicle-mounted devices installed on commercial chassis and covers the following type of units: See Figure 1.

(i) Extensible boom aerial devices.

(ii) Aerial ladders.

(iii) Articulating boom aerial devices.

(iv) Vertical towers.

(v) A combination of any of the equipment specified in paragraphs (i) to (iv) of this subdivision.

(b) ANSI standard A92.3 2006 edition, "Manually Propelled Elevating Aerial Platforms", which is adopted by reference in R 408.15810. This standard applies to work platforms that

are manually propelled, that are vertically adjustable by manual or powered means, and that may be towed or manually moved horizontally on wheels or casters that are an integral part of the work platform base. See Figure 2.

(c) ANSI standard A92.5 2006 edition, "Boom-Supported Elevating Work Platforms", which is adopted by reference in R 408.15810. This standard applies to all integral frame, boom-supported elevating work platforms which telescope, articulate, rotate, or extend beyond the base dimensions. See Figure 3.

(d) ANSI standard A92.6 1999 edition, "Self-Propelled Elevating Work Platforms," which is adopted by reference in R 408.15810. This standard applies to self-propelled vertically adjustable integral chassis work platforms. Such work platforms are power operated with primary controls for all movement operated from the platform. See Figure 4.

History: 2008 AACS; 2013 AACS; 2018 AACS.

R 408.15803 Definitions; A to I.

Rule 5803. (1) "Aerial device" or "aerial work platform" means an entire device that is designed and manufactured to raise personnel to an elevated work position on a platform supported by scissors, masts, or booms; or any vehicle-mounted device, telescoping or articulating or both, that is used to position an employee.

(2) "Aerial ladder" means an aerial device consisting of a single- or multiple-section extensible ladder.

(3) "Articulating boom platform" means an aerial device with 2 or more hinged boom sections.

(4) "Authorized person" means a person who is approved and assigned to perform specific types of duties by the employer and who is qualified to perform those duties because of his or her training or experience.

(5) "Commercial chassis" means a vehicle that is built for over-the-road or roadway travel.

(6) "Exposed power line" means a power line that is not isolated or guarded.

(7) "Extensible boom platform" means an aerial device, except ladders, with a telescopic or extensible boom. A telescopic derrick with a personnel platform attachment shall be considered to be an extensible boom platform when used with a personnel platform.

(8) "Insulated aerial device" means an aerial device designed for work on or near energized lines and apparatus.

History: 1979 AC; 1988 AACS; 2008 AACS; 2018 AACS.

R 408.15804 Definitions M to Q.

Rule 5804. (1) "Mechanically positioned" means that the elevating assembly, whether a mechanical, cable or chain, hydraulic, pneumatic, electric or other powered mechanism, is used to raise or lower the platform.

(2) "Mobile unit" means a combination of an aerial device, vehicle and related equipment.

(3) "Override" means to transfer or to take away platform control functions by another station.

(4) “Personal fall arrest system” means a system used to arrest an employee in a fall from a walking-working surface. It consists of a body harness, anchorage, and connector. The

means of connection may include a lanyard, deceleration device, lifeline, or a suitable combination of these.

(5) "Platform" means the portion of an aerial work platform, such as a bucket, basket, stand, cage, or the equivalent, that is designed to be occupied by personnel.

(6) "Power line" means a distribution or transmission electrical line.

(7) "Qualified line clearance tree trimmer" means an employee trained to work in proximity of energized power transmission and distribution lines. An employee in a training program is included in this definition.

(8) "Qualified lineman" means an employee trained and authorized to work on or near energized lines. An employee in a training program is included in this definition.

(9) "Qualified person" means a person who possesses a recognized degree, certificate, professional standing, or skill and who, by knowledge, training, and experience, has demonstrated the ability to deal with problems relating to the subject matter, the work, or the project.

(10) "Qualified telecommunications employee" means an employee trained to work on communication lines in the proximity of energized power transmission and distribution lines.

History: 1979 AC; 2008 AACS; 2018 AACS.

R 408.15805 Definitions; S to Y.

Rule 5805. (1) "Safety factor" means the ratio of the braking strength of a piece of material or object to maximum designed load or stress applied when in use.

(2) “Travel restraint system” means a combination of an anchorage, anchorage connector, lanyard, or other means of connection, and body support that an employer uses to eliminate the possibility of an employee going over the edge of a walking-working surface.

(3) "Vehicle" means any carrier that is not manually propelled.

(4) "Vehicle-mounted elevating and rotating work platform" means an aerial device or aerial work platform.

(5) "Vertical tower" means an aerial device designed to elevate a platform in a substantially vertical axis on a level surface.

(6) "Yield point" means the point where material begins to take a permanent deformation.

History: 1979 AC; 2008 AACS; 2018 AACS.

R 408.15810 Adopted standards.

Rule 5810. (1) The standards specified in this rule, are adopted by reference.

(2) The following ANSI standards are available from Global Engineering Documents, 15 Inverness Way East, Englewood, Colorado, 80112, USA, telephone number: 1-800-854-7179 or via the internet at web-site: http://global.ihs.com; at a cost, as of the time of adoption of these rules, as stated in this subrule:

(a) ANSI A92.2, “Standard for Vehicle-Mounted Elevating and Rotating Work Platforms,” 1969 edition. Cost: $20.00.

(b) ANSI A92.3, "Manually Propelled Elevating Aerial Platforms", 2006 edition. Cost: $68.00.

(c) ANSI A92.5, "Boom-Supported Elevating Work Platforms", 2006 edition. Cost: $68.00.

(3) The following ANSI standards are available from the Scaffold and Access Industry Association, 400 W. Admiral Blvd., Kansas City, Missouri, 64106, USA, telephone number: 1-816-595-4860 or via the internet at website: www.shop.saiaonline.org; at a cost, as of the time of adoption of these rules, as stated in this subrule:

(a) ANSI A92.2, "Vehicle-Mounted Elevating and Rotating Aerial Devices," 2001 edition. Cost: $45.00.

(b) ANSI A92.3, "Manually Propelled Elevating Work Platforms", 1990 edition. Cost: $45.00.

(c) ANSI A92.5, "Boom-Supported Elevating Work Platforms", 1992 edition. Cost: $45.00.

(d) ANSI A92.6, "Self-Propelled Elevating Work Platforms," 1999 edition. Cost: $45.00.

(4) The "Manual on Uniform Traffic Control Devices, Part 6: Temporary Traffic Control," 2011 Michigan/2009 Federal Edition is available at no cost from the Michigan Department of Transportation via the Internet at website: www.michigan.gov/mdot. The entire 2011 Michigan Manual on Uniform Traffic Control Devices (MMUTCD) may be purchased from the Michigan Department of Transportation, Cashiers Office, P.O. Box 30648, Lansing, Michigan 48909-8148; (517) 322-1676; at a cost of $145.00 as of the time of adoption of these rules.

(5) The standards adopted in these rules are available for inspection at the Department of Licensing and Regulatory Affairs, MIOSHA Regulatory Services Section, 530 West Allegan Street, P.O. Box 30643, Lansing, Michigan, 48909-8143.

(6) The standards adopted in these rules may be obtained from the publisher or may be obtained from the Department of Licensing and Regulatory Affairs, MIOSHA Regulatory Services Section, 530 West Allegan Street, P.O. Box 30643, Lansing, Michigan, 48909-8143, at the cost charged in this rule, plus $20 for shipping and handling.

History: 2008 AACS; 2013 AACS; 2018 AACS.

R 408.15811 Rescinded.

History: 1979 AC; 2008 AACS; 2013 AACS.

R 408.15812 Availability of MIOSHA referenced standards.

Rule 5812. The following Michigan Occupational Safety and Health Administrative (MIOSHA) standards are referenced in these rules. Up to 5 copies of these standards may be obtained at no charge from the Michigan Department of Licensing and Regulatory Affairs, MIOSHA Regulatory Services Section, 530 West Allegan Street, P.O. Box 30643, Lansing, MI, 48909-8143 or via the internet at website: www.michigan.gov/mioshastandards. For quantities greater than 5, the cost, at the time of adoption of these rules, is 4 cents per page.

(a) Construction Safety Standard Part 22 "Signals, Signs, Tags, and Barricades," R 408.42201 to R 408.42243.

(b) General Industry Safety and Health Standard Part 21 “Powered Industrial Trucks,” R 408.12101 to R 408.12193.

(c) General Industry Safety and Health Standard Part 33 “Personal Protective Equipment,” R 408.13301 to R 408.13398.

(d) General Industry Safety Standard Part 53 “Tree Trimming and Removal,” R 408.15301 to R 408.15363.

(e) General Industry Safety Standard Part 74 “Fire Fighting,” R 408.17401 to R 408.17464.

History: 2008 AACS; 2013 AACS; 2018 AACS.

R 408.15815 Training; permits.

Rule 5815. (1) An employer shall provide each employee who will operate the aerial work platform with instruction and training regarding the equipment before a permit is issued or reissued. Such instruction and training shall include the following:

(a) Instruction by a qualified person in the intended purpose and function of each of the controls.

(b) Training by a qualified person or reading and understanding the manufacturer’s or owner’s operating instructions and safety rules.

(c) Understanding by reading or by having a qualified person explain, all decals, warnings, and instructions displayed on the aerial work platform.

(d) Reading and understanding the provisions of this subrule and subrules (1) to (9) of this rule or be trained by a qualified person on their content.

(2) An employer shall provide the operator of an aerial work platform with an aerial work platform permit.

(3) The requirements of subrule (1)(a), (b), (c), and (d) of this rule shall be met before an employee is issued a permit.

(4) A permit shall be carried by the operator or be available at the job site/work place and shall be displayed upon request by a department of licensing and regulatory affairs representative.

(5) A permit shall indicate the type of aerial work platforms an operator has been trained on and is qualified to operate.

(6) A permit to operate an aerial work platform is valid only when performing work for the employer who issued the permit. A permit shall be issued for a period of not more than 3 years.

(7) A permit shall contain all of the following information (see sample permit):

(a) Firm name.

(b) Operator’s name.

(c) Name of issuing authority, same as ‘Authorized by.’

(d) The following are types of aerial work platforms the operator is authorized to operate:

(i) Vehicle-mounted elevating work platform such as:

(1) Extensible boom aerial devices.

(2) Aerial ladders.

(3) Articulating boom aerial devices.

(4) Vertical towers.

(ii) Manually propelled elevating work platforms.

(iii) Boom-supported elevating work platforms.
(iv) Self-propelled elevating work platforms.
(e) Date issued.
(f) Expiration date.
(8) The following is a sample permit:

SAMPLE PERMIT			
AERIAL WORK PLATFORM PERMIT _____ *(Firm Name)* _____ (Name) Type of aerial work platform authorized to operate:			
Date Issued	Type	Authorized by	Expiration Date

(9) The manufacturer's operating instructions and safety rules shall be provided and maintained in a legible manner on each unit by the employer.

History: 2008 AACS; 2013 AACS; 2018 AACS.

R 408.15817 Preoperational procedures; platform inspections.

Rule 5817. (1) The employer shall ensure before the commencement of operations near power lines and when the clearances cannot be maintained as specified in Tables 1-3, that the owner, owner representative, or utility are notified with all pertinent information about the job.

(2) Any overhead wire shall be considered to be an energized line until the owner of the line, his or her authorized representative, or a utility representative assures either of the following:

(a) The line is de-energized and has been visibly grounded.

(b) The line is insulated for the system voltages and the task will not compromise the insulation of the conductor and/or cause an electrical hazard.

Compiler's Note: R 408.15817 is not being revised. This rule is included in the proposed rule set to show the correct rule catch line. The current catch line has unnecessary formatting that is being deleted.

History: 2008 AACS; 2013 AACS; 2018 AACS.

CONSTRUCTION, TESTING, AND USE PROVISIONS

R 408.15821 Construction, modification, and remounting.

Rule 5821. (1) Aerial work platforms modified, remounted, designed, constructed, and tested after December 28, 1974, but before the effective date of this rule, shall be in compliance with the requirements of the following applicable American National Standards Institute Standards:

(a) ANSI standard A92.2, “Standard for Vehicle-Mounted Elevating and Rotating Work Platforms,” 1969 edition.

(b) ANSI standard A92.3, "Manually Propelled Elevating Work Platforms", 1990 edition.

(c) ANSI standard A92.5, "Boom-Supported Elevating Work Platforms", 1992 edition.

(d) ANSI standard A92.6, "Self-Propelled Elevating Work Platforms", 1999 edition.

These standards are adopted by reference in R 408.15810.

(2) A permanent label or tag shall be affixed to an aerial work platform modified, remounted, designed, constructed, or tested after March 28, 1975, but before the effective date of these rules, certifying compliance with subrule (1) of this rule.

(3) Aerial work platforms modified, remounted, designed, constructed, and tested, after January 1, 2007, shall be in compliance with the requirements of the following applicable American National Standards Institute Standards:

(a) ANSI standard A92.2, "Vehicle-Mounted Elevating and Rotating Aerial Devices", 2001 edition.

(b) ANSI standard A92.3, "Manually Propelled Elevating Aerial Platforms", 2006 edition.

(c) ANSI standard A92.5, "Boom-Supported Elevating Work Platforms", 2006 edition.

(d) ANSI standard A92.6, "Self-Propelled Elevating Work Platforms", 1999 edition.

These standards are adopted by reference in R 408.15810.

(4) An aerial work platform shall bear a permanent plate stating the designed rating capacity.

(5) An aerial work platform shall be mounted on a vehicle capable of sustaining, or reinforced to sustain, the imposed load. The vehicle shall be a stable support for the aerial device.

(6) The lifting and outrigger system of an aerial work platform shall be equipped with a means, such as, but not limited to, a pilot operated check valve to ensure that the system will not permit the work platform to drop in a free fall in event of a power or hydraulic line failure.

(7) Aerial work platforms shall not be field-modified for uses other than those intended by the manufacturer, unless the modification has been certified in writing by the manufacturer or by any other equivalent entity, such as a nationally recognized testing laboratory, to be in compliance with the applicable ANSI standard and this rule, and to be at least as safe as the equipment was before modification.

History: 1979 AC; 2008 AACS; 2013 AACS.

R 408.15823 Rescinded.

History: 1979 AC; 2008 AACS.

R 408.15824 Rescinded.

History: 1979 AC; 2008 AACS.

R 408.15825 Controls.

Rule 5825. (1) All of the following information shall be clearly marked in a permanent manner on each aerial work platform:

(a) Special workings, cautions, or restrictions necessary for operation.

(b) Rated work load.

(c) A clear statement if the aerial work platform is electrically insulated.

(2) Directional controls shall be in compliance with all of the following provisions:

(a) Be of the type that will automatically return to the off or neutral position when released.

(b) Be protected against inadvertent operation.

(c) Be clearly marked as to their intended function.

(3) An overriding control shall be provided in the platform which must be continuously activated for platform directional controls to be operational and which automatically returns to the off position when released.

(4) Articulating, extensible boom platforms, or both, primarily designed as personnel carriers, shall be equipped with both upper and lower controls.

(5) Upper controls shall be located within reach of the operator.

(6) Aerial work platforms shall be equipped with emergency controls at ground level.

(7) Emergency ground level controls shall be clearly marked as to their intended function and be capable of overriding the platform controls.

(8) Attachment points shall be provided for fall protection devices for personnel who occupy the platform on aerial work platforms described in R 408.15802 (a) and (c). See Figures 1 and 3.

Compiler's Note: R 408.15825 is being revised. In addition, the proposed rule set is correcting the rule catch line. The current catch line has unnecessary formatting that is being deleted.

History: 1979 AC; 2008 AACS; 2013 AACS; 2018 AACS.

R 408.15830 Rescinded.

History: 1988 AACS; rescinded 2008 AACS.

R 408.15831 Insulated aerial device testing.

Rule 5831. If the aerial work platform is rated and used as an insulated aerial device, an employer shall test the electrical insulating components for compliance with the rating of the aerial work platform in accordance with ANSI standard A92.2 2001 edition "Vehicle-Mounted Elevating and Rotating Aerial Devices," as adopted in R 408.15810. Testing shall comply with all of the following provisions:

(a) The test shall be performed not less than annually.

(b) Written, dated, and signed test reports shall be made available by the employer for examination by a department representative.

(c) The insulated portion of an aerial device shall not be altered in any manner that might reduce its insulating value.

Compiler's Note: R 408.15831 is being revised. In addition, the proposed rule set is correcting the rule catch line. The current catch line has unnecessary formatting that is being deleted.

History: 1988 AACS; 2008 AACS; 2013 AACS; 2018 AACS.

R 408.15832. Electrical hazards.

Rule 5832. (1) The employer shall ensure that an aerial work platform shall be operated so that the distances from energized power lines and equipment prescribed in Table 1 are maintained, except for the following:

(a) As prescribed in subrule (2) of this rule addressing tree trimming.

(b) As prescribed in subrule (3) of this rule addressing telecommunications.

(c) Where insulating barriers are not a part of or an attachment to the aerial device that has been erected to prevent physical contact with the lines.

(2) A qualified lineman or a qualified line clearance tree trimmer, as prescribed in General Industry Safety Standard Part 53 "Tree Trimming and Removal" as referenced in R 408.15812, shall maintain distances as prescribed in Table 2 when performing work from an aerial work platform on or near an exposed power line unless any of the following conditions exist:

(a) The employee is insulated or guarded from the energized part by gloves or gloves and sleeves, as provided for and prescribed in General Industry Safety and Health Standard Part 33 "Personal Protective Equipment," as referenced in R 408.15812.

(b) The employee is insulated, isolated, or guarded from any other conductive part.

(c) The energized part is insulated from the employee.

(3) A qualified telecommunications employee shall maintain the distances prescribed in Table 3 when working from an aerial lift, unless the employee is insulated, isolated, or guarded from any other conductive part or the energized part is insulated from the employee.

(4) Employees shall use insulated bucket, gloves, and sleeves that are rated at more than the voltage to be worked on or that with which they might come into contact, to comply with subrules (2) and (3) of this rule.

(5) The clearances, as prescribed in Tables 1-3, do not apply when the owner of the line or his or her authorized representative, or a utility representative assures that the conductor is insulated for the system voltages and the task will not compromise the insulation of the conductor and/or cause an electrical hazard.

(6) Tables 1, 2, and 3 read as follows:

Table 1 Minimum Clearance Distances for Equipment		
Voltage	Clearance With Boom Raised	Clearance Boom Lowered and No Load in Transit
To 50 kV	10 feet	4 feet
Over 50 kV	10 feet + .4 inch per each 1 kV over 50 kV	10 feet
50 to 345 kV	--	10 feet
346 to 750 kV	--	15 feet

Table 2 Minimum Working Distances for Qualified Line-Clearance Tree Trimmers and Qualified Linemen	
Voltage Range Phase to Phase (kilovolts)	Minimum Working Distance
2.1 to 15.0	2 feet 0 inches (61 cm)
15.1 to 35.0	2 feet 4 inches (71 cm)
35.1 to 46.0	2 feet 6 inches (76 cm)
46.1 to 72.5	3 feet 0 inches (91 cm)
72.6 to 121.0	3 feet 4 inches (102 cm)
138.0 to 145.0	3 feet 6 inches (107 cm)
161.0 to 169.0	3 feet 8 inches (112 cm)
230.0 to 242.0	5 feet 0 inches (152 cm)
345.0 to 362.0	*7 feet 0 inches (213 cm)
550.0 to 552.0	*11 feet 0 inches (335 cm
700.0 to 765.0	*15 feet 0 inches (457 cm)
*Note: For 345-362 kV., 500-552 kV., and 700-765 kV., the minimum working distance and the minimum clear hot stick distance may be reduced that such distances are not less than the shortest distance between the energized part and a grounded surface.	

Table 3 Minimum Approach Distances for Qualified Telecommunications Employees	
Voltage Range (Nominal Phase to Phase)	Minimum Approach Distances

300 V and less	1 foot - 0 inches (30.5 cm)
Over 300 V, not over 750 V	1 foot - 6 inches (46 cm)
Over 750 V, not over 2 kV	2 feet - 0 inches (61 cm
Over 2 kV, not over 15 kV	3 feet - 0 inches (91 cm)
Over 15 kV, not over 37 kV	3 feet – 6 inches (107 cm)
Over 37 kV, not over 87.5 kV	4 feet – 0 inches (122 cm)
Over 87.5 kV, not over 121 kV	4 feet – 6 inches (137 cm)
Over 121 kV, not over 140 kV	--

History: 1979 AC; 1983 AACS; 1988 AACS; 2008 AACS; 2018 AACS.

R 408.15833 Vehicles; traffic control.

Rule 5833. (1) Before moving a vehicle supporting an aerial ladder for highway travel, employees shall secure ladders in the lower position, and shall use the manually operated device at the base of the ladder, or other effective means to prevent elevation or rotation of the ladder.

(2) Before moving a vehicle supporting an aerial lift for travel, employees shall inspect the boom to ensure that it is properly cradled and the outriggers are in the stowed position, except as provided in subrule (3) of this rule.

(3) When a boom is elevated with employees in working position, the vehicle supporting an aerial device shall not be moved unless the equipment is specifically designed for this type of operation and meets the requirements of R 408.15821.

(4) An employer shall ensure that operators of an aerial work platform over or adjacent to any public or private roadway maintain adequate clearances of all portions of the aerial work platform to prevent being struck by vehicular traffic.

(5) When aerial work platforms are in use, all traffic control requirements shall be in compliance with Part 6 of the 2011 Michigan Manual on Uniform Traffic Control Devices (MMUTCD), as adopted in R 408.15810, and Construction Safety Standard Part 22 “Signals, Signs, Tags, and Barricades,” as referenced in R 408.15812.

Compiler’s Note: R 408.15833 is being revised. In addition, the proposed rule set is correcting the rule catch line. The current catch line has unnecessary formatting that is being deleted.

History: 1979 AC; 2008 AACS; 2013 AACS; 2018 AACS.

R 408.15836 Fall protection.

Rule 5836. (1) An employer shall ensure that a personal fall arrest or travel restraint system that meets the requirements in General Industry Safety and Health Standard Part 33 "Personal Protective Equipment," as referenced in R 408.15812, shall be worn and attached to the boom or basket when working from an aerial lift.

(2) Any occupant of an aerial work platform described in R 408.15802(a) and (c) and Figures 1 and 3 shall use a personal fall arrest system. A personal fall arrest system shall

only be used where the aerial lift is designed to withstand the vertical and lateral loads caused by an arrested fall.

(3) An employee may use a body support with a lanyard, or other means of connection, and the anchorage connector and anchorage arranged so that the employee is not exposed to any fall distance. An employee is required to use a travel restraint system where the aerial lift cannot withstand the vertical and lateral loads imposed by an arrested fall.

(4) An employee shall be prohibited from belting off to an adjacent pole, structure, or equipment while working from an aerial work platform.

(5) An employer shall not allow employees to exit an elevated aerial work platform, except where elevated work areas are inaccessible or hazardous to reach. Employees may exit the platform with the knowledge and consent of the employer. When employees exit to unguarded work areas, fall protection shall be provided and used as prescribed in General Industry Safety and Health Standard Part 33 "Personal Protective Equipment," as referenced in R 408.15812.

Compiler's Note: R 408.15836 is being revised. In addition, the proposed rule set is correcting the rule catch line. The current catch line has unnecessary formatting that is being deleted.

History: 2008 AACS; 2013 AACS; 2018 AACS.

R 408.15839 Operating procedures.

Rule 5839. (1) The aerial work platform shall be used only in accordance with the manufacturers or owners operating instructions and safety rules.

(2) The designed rated capacity for a given angle of elevation shall not be exceeded.

(3) The guardrail system of the platform shall not be used to support any of the following:

(a) Materials.

(b) Other work platforms.

(c) Employees.

(4) Employees shall maintain firm footing on the platform while working on the platform. The use of railings, planks, ladders, or any other devices on the platform for achieving additional height is prohibited.

(5) Only aerial work platforms that are equipped with a manufacturer's installed platform controls for horizontal movement shall be moved while in the elevated position.

(6) Before and during driving while elevated, an operator of a platform shall do both of the following:

(a) Look in the direction of, and keep a clear view of, the path of travel and make sure that the path is firm and level.

(b) Maintain a safe distance from all of the following:

(i) Obstacles.

(ii) Debris.

(iii) Drop-offs.

(iv) Holes.

(v) Depressions.

(vi) Ramps.

(vii) Overhead obstructions.

(viii) Overhead electrical lines.

(ix) Other hazards to safe elevated travel.

(7) Outriggers or stabilizers, when provided, are to be used in accordance with the manufacturer's instruction. Brakes shall be set and outriggers and stabilizers shall be positioned on pads or a solid surface.

(8) Aerial work platforms shall be elevated only when on a firm and level surface or within the slope limits allowed by the manufacturer's instructions.

(9) A vehicle-mounted aerial work platform, see Figure 1, shall have its brakes set before elevating the platform.

(10) A vehicle-mounted aerial work platform, see Figure 1, shall have wheel chocks installed before using the unit on an incline.

(11) Climbers shall not be worn while working from an aerial device unless gaff guards are provided.

(12) Platform gates shall be closed while the platform is in an elevated position.

(13) Altering, modifying, or disabling safety devices or interlocks is prohibited.

(14) Stunt driving and horseplay are prohibited.

Compiler's Note: R 408.15839 is being revised. In addition, the proposed rule set is correcting the rule catch line. The current catch line has unnecessary formatting that is being deleted.

History: 2008 AACS; 2013 AACS; 2018 AACS.

R 408.15842 Figures.

Rule 5840. Figures 1, 2, 3, and 4 are as follows:

Figure 1
Vehicle-Mounted Elevating Work Platform

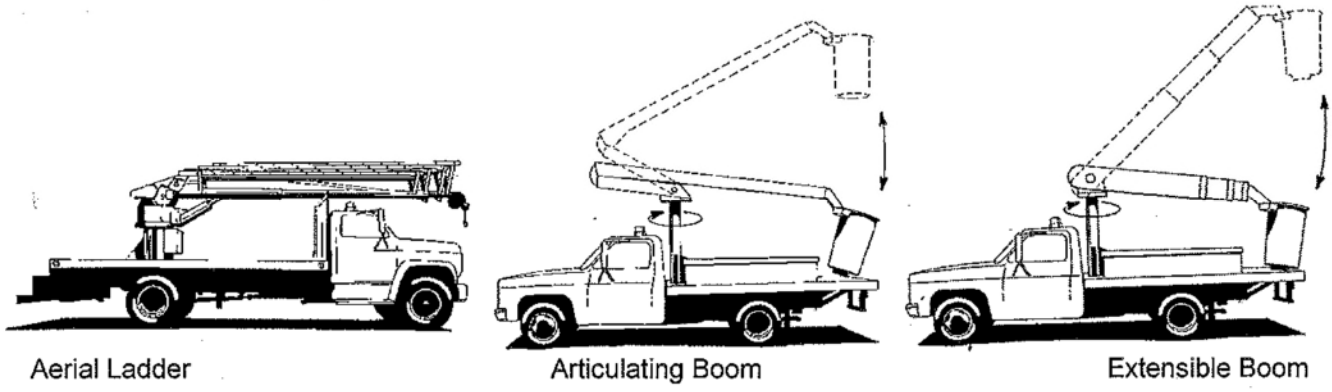

Figure 2
Manually Propelled Elevating Work Platform

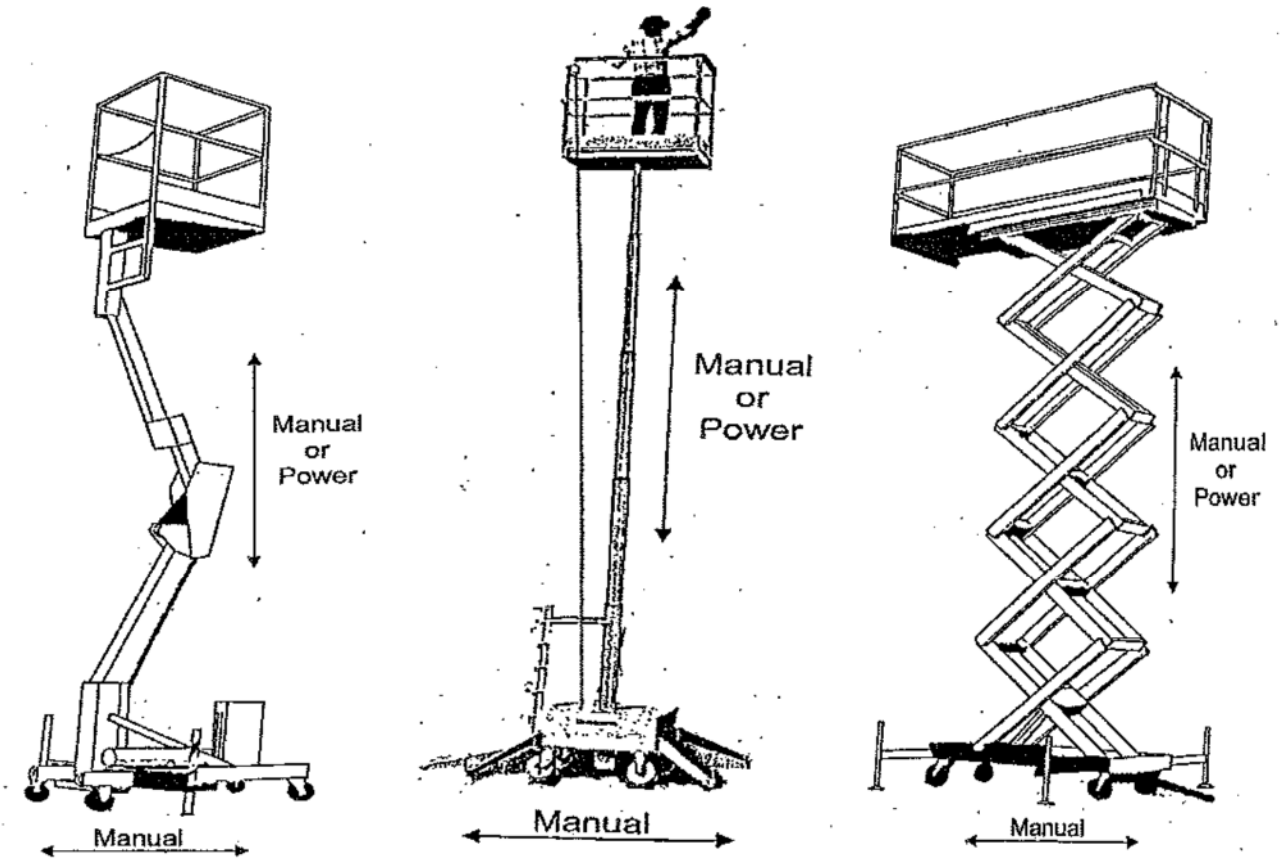

Figure 3
Boom-Supported Elevating Work Platform

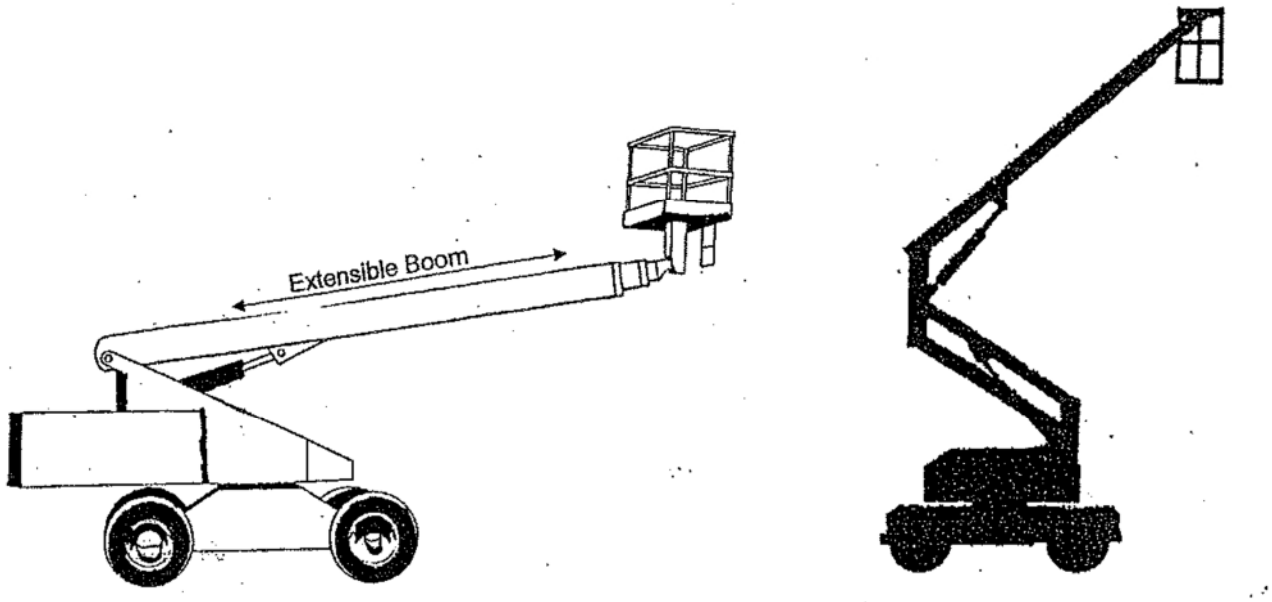

Figure 4
Self-Propelled Elevating Work Platform

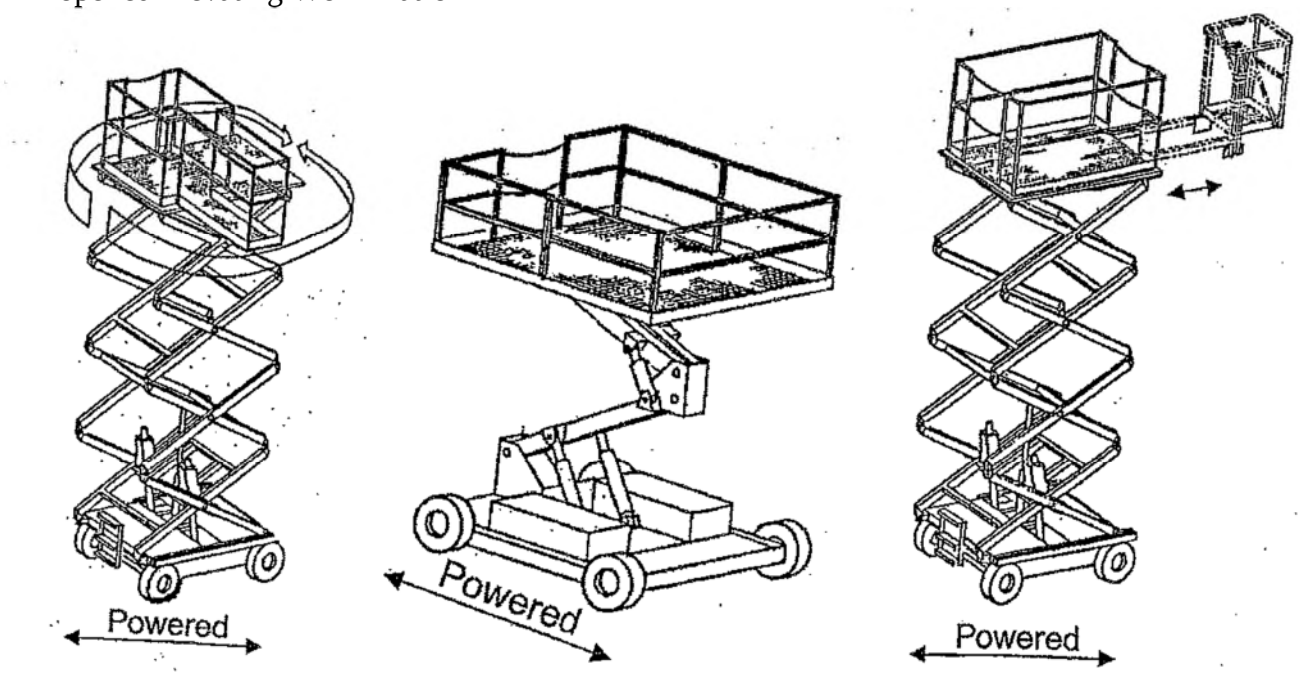

History: 2008 AACS; 2018 AACS.